DVI 88-G1 EOS BM

Infinity G1 vertical hood. Special edition by Italdesign Giugiaro, 80cm

LED | Perimeter extraction | Stop Delay Timer | Fresh AIR

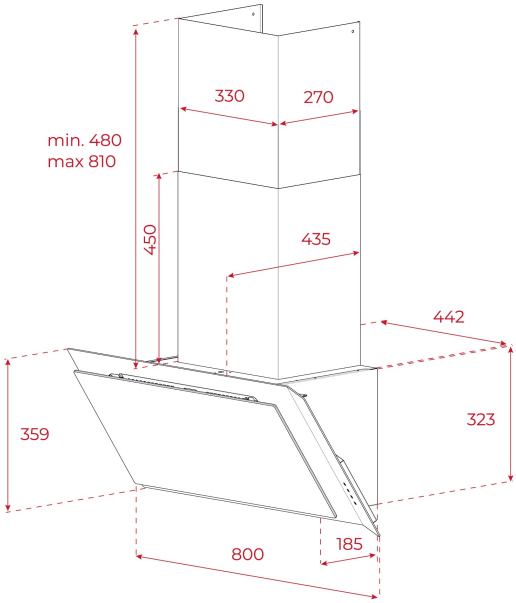

REFERENCE

REF: 112930056 EAN: 8434778022018

FEATURES

Infinity G1 special edition
Designed in Italy by Italdesign Giugiaro
Decorative vertical hood
Exclusive matte black finishing
Push buttons control
FreshAir function
Rim extraction
Brushless EcoPower Motor
3 speeds + 1 intensive
Free Outlet exhaust capacity (m3/h): 786
Max speed exhaust capacity (m3/h): 800
2 LED lamps
1 aluminium filters with 3 layers
Stop delay timer
Filter saturation indicator
Anti-return valve included
Outlet reduction included
Optional recirculation kit with tube cover installation:CFH 15200 L3C
Optional regenerative recirculation kit with tube cover installation: RFH 15200 L3C
Optional recirculation kit without tube cover installation: CFH 15200 O2C
Optional regenerative recirculation kit without tube cover installation: RFH 15200 O2C
Optional Charcoal Filter: 113290015
Optional Regenerative filter: R1RTK

DIMENSIONS

Product height (mm): 810-1140
Product width (mm): 800
Product depth (mm): 409
Product length (mm):
Net weight (Kg): 17,5

TECHNICAL DETAILS

Energy Efficiency Class: A+
Noise (LwA) Min Speed (dB): 47,4
Noise (LwA) Max Speed (dB): 60
Noise (LwA) Boost Speed (dB): 71,1
Ø Outlet (mm): 150

COLOURS

112930056 Black matt