INTEGRA GFI 93030 KOS IX

Fully integrated invisible hood, easy to install and with space for storage

REFERENCE

REF: 113120007 EAN: 8434778033113

FEATURES

Built-in hood, 90cm
EasyFix installation with adjustable guides
Push buttons
3 speeds
Compact body
Speed exhaust capacity (m3/h): 153-314
Speed sound level (dBA): 50-66
D Energy Class

LED

DIMENSIONS

Product height (mm): 176
Product width (mm): 892
Product depth (mm): 320
Product length (mm):
Net weight (Kg): 6.4

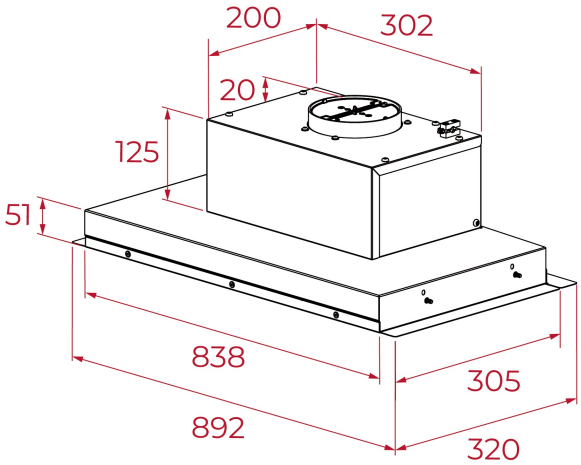

TECHNICAL DETAILS

Energy Efficiency Class: D
Noise (LwA) Min Speed (dB): 50
Noise (LwA) Max Speed (dB): 66
Noise (LwA) Boost Speed (dB): N/A
Ø Outlet (mm): 120

COLOURS

113120007 Black glass with steel