# WMK 40840 SS

Washing machine with 8 kg capacity and 15 programs

Quick Cycle

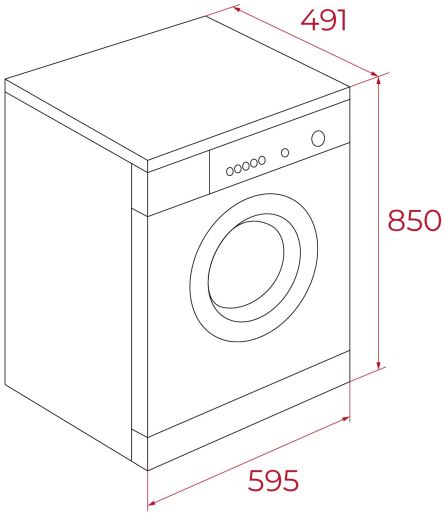


## REFERENCE

REF: 113910019 EAN: 8434778032628

## FEATURES

Free standing
Electronic control panel
Washing capacity: 8 kg
15 washing programs
Special programs: Fast: 15 minutes, ECO mode, Wool, Delicate, Sport, Cotton, BabyCare, Jeans
Special functions: Delay timer, Speed wash, Steam, Extra rinse, Prewash, DrumClean reminder, Mute
Maximum spinning speed: 1400 RPM
Automatic water regulation
Automatic door lock safety system
Child lock
Balance control system
SoftCare drum
28,8 cm wide porthole door

## DIMENSIONS

**Product height (mm):** 850
**Product width (mm):** 595
**Product depth (mm):** 533
**Product length (mm):**
**Net weight (Kg):** 60

## TECHNICAL DETAILS

Energy efficiency class (UE 2019/2016): A
Washing performance Class: /
Spinning efficiency class: B
Water consumption (litres/year): /
Noise Level (dBA): + 76
Power rate (V): 220-240 V~
Frequency (Hz): 50 Hz

## COLOURS