TIKAL DSS 785 70cm Pyramidal Decorative Hood with electronic controls and ECOPOWER motor

LED

Stop Delay Timer

DESCRIPTION	70cm Pyramidal Decorative Hood with electronic controls and ECOPOWER motor
LIFE STYLE	Total
COLOURS	
REFERENCE	REF. 40437000 EAN. 8421152145647

TIKAL DSS 785

FEATURES

Decorative pyramidal hood
Illuminated push buttons control
EcoPower motor
3 speeds + 1 intensive
Free Outlet exhaust capacity (m3/h): 792
Intensive speed exhaust capacity (m3/h): 760
Max speed exhaust capacity (m3/h): 597
Min speed exhaust capacity (m3/h): 303
Intensive speed sound level (dBA): 73
Max speed sound level (dBA): 68
Min speed sound level (dBA): 54
1 LED lamp
2 Stainless Steel filters
Stop delay timer
Operating pilot light
Anti-return valve included
Outlet reduction included

TIKAL DSS 785

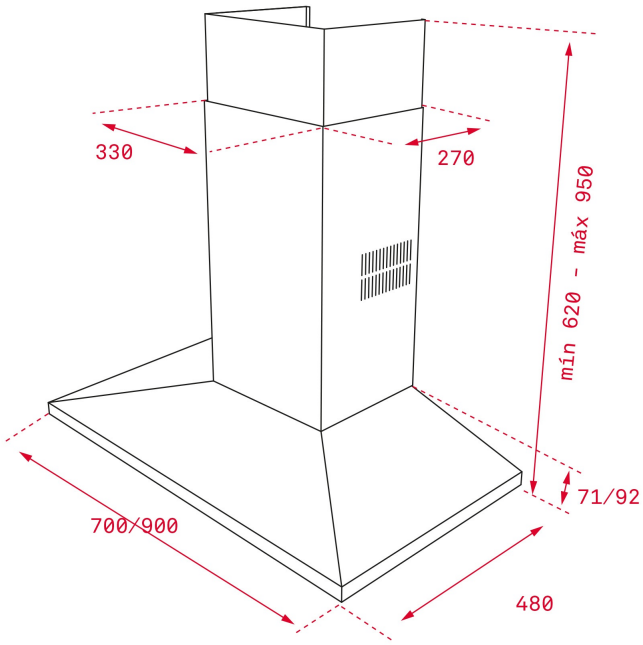

DIMENSIONS

Product height (mm): 700-1100
Product width (mm): 700
Product depth (mm): 480
Product length (mm):
Net weight (Kg): 13,49

TECHNICAL DETAILS

FEATURES

Certificates: CE; CB; Rohs
Ø Outlet (mm): 150
Type of inner light: LED
Inside light Consumption (W): 9
Plug type: Schuko plug
Power rate (V): 230
Frequency (Hz): 50
Total hood power (W): 289
Number of motors: 1
Motor power (W): 280
Air flow (Qmin) m3/h: 303
Air flow (Qmax): 597
Air flow (Qboost): 760

ACCESSORIES

Anti Return valve: Yes
Outlet reduction: Yes
Outlet extension: No
Optional Charcoal Filter: C1RTK
Regenerative charcoal filter: R1RTK
Conventional recirculation kit (opt) - w/tube cover: CFH 15200

L3C
Regenerative recirculation kit (opt) - w/tube cover: RFH 15200 L3C

MODELS

Number of filters: 2
Filter description: Stainless Steel filters MMX
Control panel: Illuminated push buttons
Stop delay timer: Yes
Number of speeds: 3+1

TIKAL DSS 785
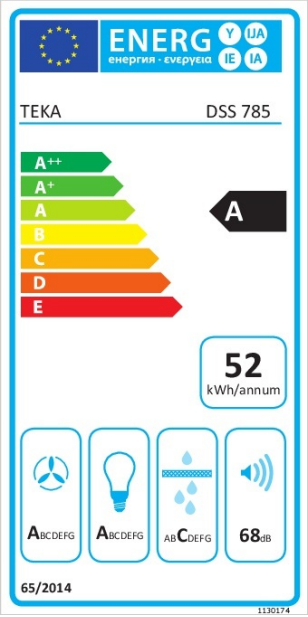
ENERGY LABEL