DG 685 Decorative glass wing wall-mounted hood with 3 speeds

LED

Stop Delay Timer

DESCRIPTION	Decorative glass wing wall-mounted hood with 3 speeds
COLOURS	
REFERENCE	REF. 40485380 EAN. 8421152130407

DG 685

FEATURES

Decorative glass wing hood
Electronic control with display
3 speeds + 1 intensive
Free Outlet exhaust capacity (m3/h): 895
Intensive speed exhaust capacity (m3/h): 807
Max speed exhaust capacity (m3/h): 631
Min speed exhaust capacity (m3/h): 315
Intensive speed sound level (dBA): 60
Max speed sound level (dBA): 55
Min speed sound level (dBA): 42
2 LED lamps
1 Stainless Steel filter
Stop delay timer
Filter saturation indicator
Operating pilot light
Anti-return valve included
Outlet reduction included
Optional recirculation kit with tube cover installation: SET 1/N1
Optional Charcoal Filter: D4C

DG 685

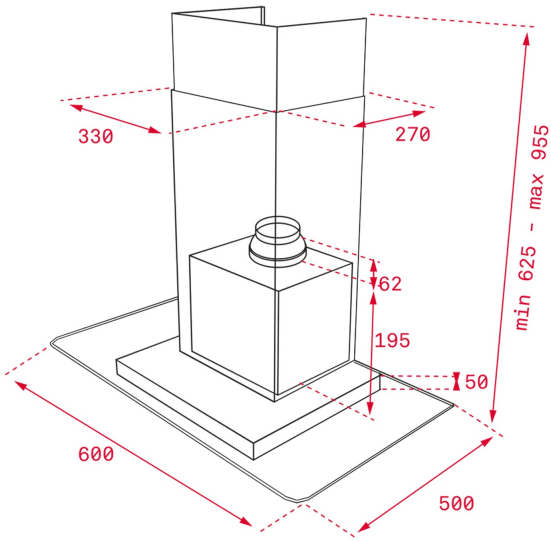

DIMENSIONS

Product height (mm): 667 - 997
Product width (mm): 600
Product depth (mm): 500
Product length (mm):
Net weight (Kg): 10,9

TECHNICAL DETAILS

FEATURES

Certificates: CE; CB; Rohs
Ø Outlet (mm): 150
Type of inner light: LED
Inside light Consumption (W): 3
Plug type: European plug
Power rate (V): 220-240
Frequency (Hz): 50
Total hood power (W): 286
Number of motors: 1
Motor power (W): 280
Air flow (Qmin) m3/h: 315
Air flow (Qmax): 631
Air flow (Qboost): 807

ACCESSORIES

Anti Return valve: Yes
Outlet reduction: Yes
Optional Charcoal Filter: C1RTK
Regenerative charcoal filter: R1RTK
Conventional recirculation kit (opt) - w/tube cover: CFH 15200 L3C

Regenerative recirculation kit (opt) - w/tube cover: RFH 15200 L3C

MODELS

Number of filters: 1
Filter description: Stainless Steel filters
Control panel: Backlit electronic control with white display
Stop delay timer: Yes
Filter saturation indicator: Yes
Number of speeds: 3+1

DG 685
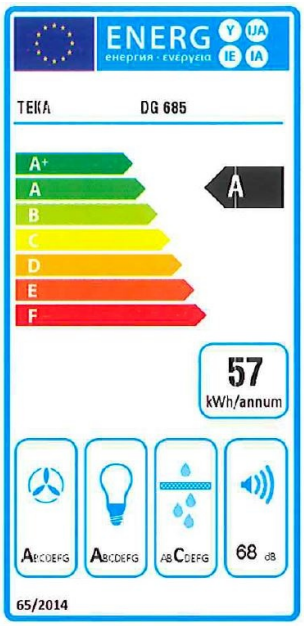
ENERGY LABEL