EX 90.1 6G AI DR CI Gas Hob with 6 cooking zones and cast iron grids of butane gas, 86cm

Auto ignition

DESCRIPTION	Gas Hob with 6 cooking zones and cast iron grids of butane gas, 86cm
COLOURS	
REFERENCE	REF. 40212602 EAN. 8421152150634

EX 90.1 6G AI DR CI

FEATURES

Gas hob
Frontal control knobs
6 cooking zones
1 double ring burner, 4.00 kW
4 semi fast burners, 1.7 kW
1 auxiliary burner, 1 kW
Stainless steel surface
Auto ignition
Cast iron grids
Maximum nominal power 12.000 W
Optional: Wok support

EX 90.1 6G AI DR CI

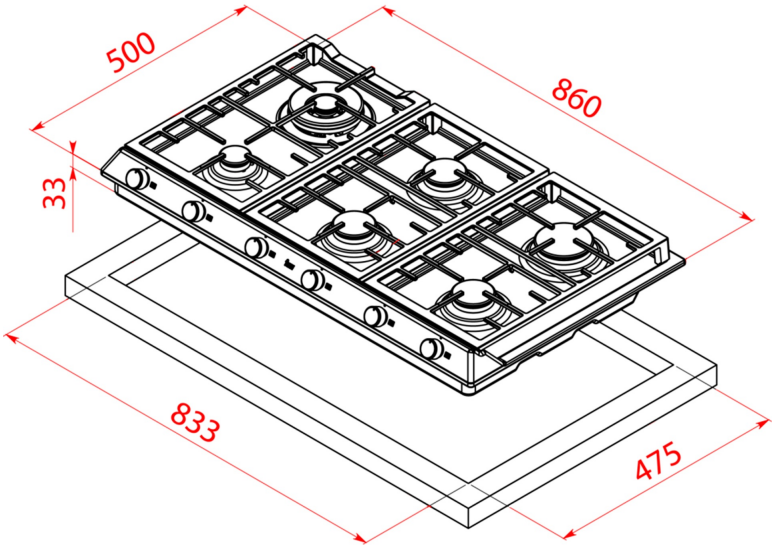

DIMENSIONS

Product height (mm): 84
Product width (mm): 860
Product depth (mm): 500
Product length (mm):
Net weight (Kg): 13,5

TECHNICAL DETAILS

FITTING MEASURES	**Built-in Width (mm):** 833 **Built-in Depth (mm):** 475 **Built-in height (mm):** 32
FEATURES	**Gas type:** Butane **Maximum nominal power (W) (Gas):** 12000 **Autoignition:** Yes
ELECTRIC CONNECTION	**Frequency (Hz):** 60 **Power rate (V):** 110 **Cable Connection Length (cm):** 110
COOKING ZONES	**Cooking Zones:** 6
SAFETY SYSTEMS	**Safety Blocking:** Yes

FINISH	**Surface finishing:** Brushed stainless steel **Surface type:** Stainless Steel
ACCESSORIES	**Grid type:** Full Grid **Wok support:** Optional **Junction Kit:** NO **Cast Iron Grids:** Yes **Teppan Yaki:** NO