RMF 99250 SS 4-Door No Frost refrigerator in 193 cm

Motor Inverter | On Holidays function | Eco Function | LED | LongLife No Frost

DESCRIPTION	4-Door No Frost refrigerator in 193 cm
LIFE STYLE	Maestro
COLOURS	
REFERENCE	REF. 113430007 EAN. 8434778002423

RMF 99250 SS

FEATURES

Free Standing bottom freezer refrigerator
LongLife No Frost with 2 independent circuits
Inverter motor
Outer control display
Electronic adjustable thermostat
Safety glass shelves
Automatic ice maker
On holidays function
Fast freezing and fast cooling function
ECO Function
LED Illumination
Climate class: SN/T
Total capacity (gross/net): 820 / 713 litres
Bottle rack included

RMF 99250 SS

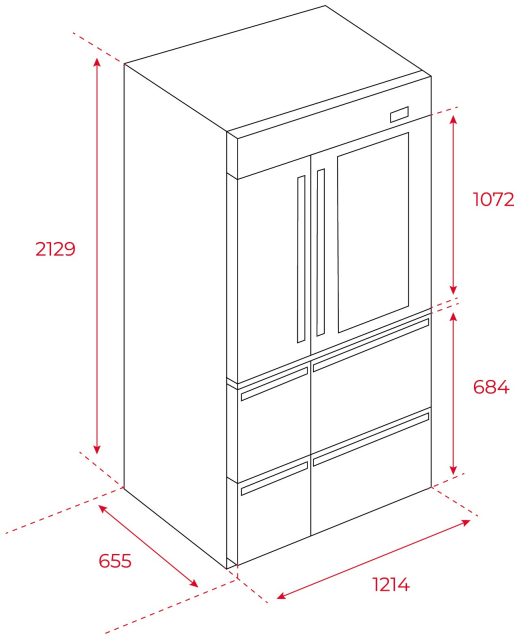

DIMENSIONS

Product height (mm): 2120
Product width (mm): 1210
Product depth (mm): 710
Product length (mm):
Net weight (Kg): 328

TECHNICAL DETAILS

PRODUCT SHEET

Cooling system: LongLife No Frost
No Frost In Refrigerator Compartment: Yes
No Frost in freezer compartment: Yes
Total gross capacity (litres): 820
Refrigerator compartment capacity (litres): 466
Freezer compartment capacity (litres): 247
Freezer classification: 4
Freezing capacity: 13
Temperature Rise Time (h): 13
Climate class: SN/T
Noise level (dB): 48

POWER SUPPLY

Frequency (Hz): 50
Power rate (V): 220-240
Power rate (W): 391
Defrost element power (W): 430

FEATURES

Type of installation: Free standing
Automatic defrosting in the refrigeration compartment: Yes

Automatic defrosting in the freezer compartment: Yes
Electronic adjustable thermostat: Yes
Display on door: Yes
Fingerprint proof door: Yes
Antibacterial treatment: NO
Freezing set button: Yes
Cooling set button: Yes
Lock function: Yes
Fast freezing: Yes
Fast Cooling Function: Yes
On Holidays Function: Yes
ECO function: Yes
Inner light: Yes
Type of inner light: Multi LED Illumination
External handle: Yes
Integrated handle: Yes

CONTROL INDICATOR LIGHTS

Operating light fridge: Yes
Operating light freezer: Yes
Freezer compartment temperature display: Yes
Fast freezing indicator: Yes

EQUIPMENT

Antibacterial gasket: Yes
Multipurpose compartment: NO
Automatic ice maker: Yes
Bottle rack type: Bottle drawer with rails
Roller (rear): Yes
Roller (front): Yes