SteakMaster BK-SS Multifunction Pyrolytic oven with special Grill and Cast iron grid for Steaks

DualClean | Plus Extension Telescopic Guide | HydroClean | Pyrolysis | SoftClose | SurroundTemp

DESCRIPTION	Multifunction Pyrolytic oven with special Grill and Cast iron grid for Steaks
LIFE STYLE	Maestro
COLOURS	
REFERENCE	REF. 111000026 EAN. 8434778009910

SteakMaster BK-SS

FEATURES

SteakMaster oven
Multifunction SurroundTemp oven
13 cooking functions
Powerful SteakGrill (700ºC)
Pyrolysis self-cleaning system and automatic HydroClean system
Touch control display with knobs
Electronic timer (Delay/Start function)
20 automatic programs for meat
Chrome supports with 5 cooking levels
Plus Extension Telescopic guides
Removable quadruple glazed door
SoftClose system
Automatic disconnection security system
Children safety lock
Automatic quick preheating
Anti-tip deep tray and reinforced grid
Special cast iron grid for steaks included
Capacity (gross/net): 71 / 63 litres

SteakMaster BK-SS

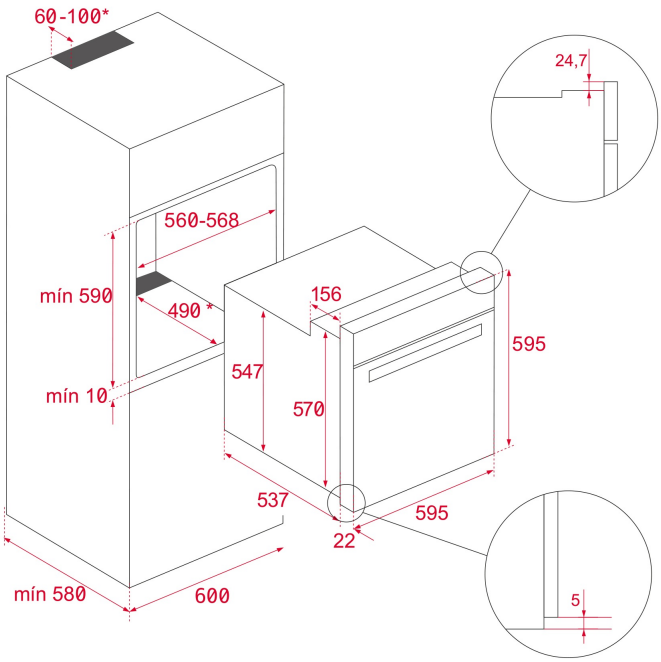

DIMENSIONS

Product height (mm): 595
Product width (mm): 595
Product depth (mm): 537+22
Product length (mm):
Net weight (Kg): 45,8

TECHNICAL DETAILS

FEATURES

Certificates: N / CE / CCA / CB / EAC
Number of cavities: 1
Type of inner light: Halogen
Inside light position: Left-Right TOP CORNER
Enamelled cavity: Yes
Min. Temperature Regulator (ºC): 30
Max. Temperature Regulator (ºC): 250
Function selector: ELECTRONIC
Number of cooking functions: 13
Number of recipes: 20
Number of memories: 0
Top + Bottom function: Yes
Grill + Bottom function: Yes
Grill function: Yes
MaxiGrill function: Yes
Top + Bottom + Fan function: Yes
Bottom function: Yes
Bottom + TURBO (Pizza) function: Yes
Turbo function: Yes
ECO function: Yes
Ferment function: Yes
Automatic quick heating: Yes

Slow Cook: Yes
Knobs type: MMX FIX ROTATIVE
Ring illuminated: Yes
Removable chromed tray guides: Yes
Number of guide levels: 5
Easy slide telescopic guides: Yes
SoftClose: Yes

ELECTRIC CONNECTION

Maximum Nominal Power (W): 3518
Frequency (Hz): 50/60
Power rate (V): 220-240
Cable Connection Length (cm): 150
Plug: Yes
Inside light Consumption (W): 2x25

ENERGY CONSUMPTION

Energy consumption per cycle in conventional mode (kWh): 1.01
Energy consumption per cycle in fan-forced convection mode (kWh): 0,77
Bottom Heating Element (W): 1050
Grill (W): 2400
Maxi Grill (W): 3450
Traditional (W): 2100
Turbo (W): 2000
Multifunction Turbo (W): 25
Turnspit motor (W): 0
Cooling Fan Motor (W): 30

SAFETY SYSTEMS

Automatic disconnection when opening the door: Yes
Panel blocking system: Yes
Children safety block option: Yes
Grill protection: Yes
Anti-tip tray system: Yes
Safety Thermostat: Yes

CLEANING SYSTEM

Crystal Clean Enamel (Slippery): Yes
Hydroclean PRO: Yes
Pyrolytic: Yes
DualClean: Yes

ACCESSORIES

Deep Tray (50 mm): 1
Cast iron tray: 1
Reinforced grid: 1

ENERGY EFFICIENCY

Energy Efficiency Class: A
Energy Efficiency Index (EEI): 95

SteakMaster BK-SS
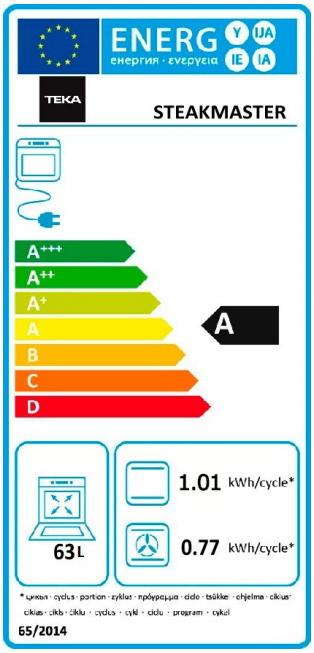
ENERGY LABEL