EFX 90.1 5G AI AL DR CI LEFT Gas Stainless Steel Hob with frontal control knobs of butane and natural gas in 86 cm

Auto ignition

Autolock

DESCRIPTION	Gas Stainless Steel Hob with frontal control knobs of butane and natural gas in 86 cm
LIFE STYLE	Total
COLOURS	
REFERENCE	REF. 112610033 EAN. 8434778018752

EFX 90.1 5G AI AL DR CI LEFT

FEATURES

Gas hob
Frontal control knobs
5 cooking zones
1 double ring burner, 4.00 kW
1 fast burner, 3.00 kW
2 semi fast burners, 1.7 kW
1 auxiliary burner, 1 kW
Stainless steel surface
Auto ignition
Auto-lock safety system
Cast iron grids
Maximum nominal power 11.500 W
Optional: Wok support

EFX 90.1 5G AI AL DR CI LEFT

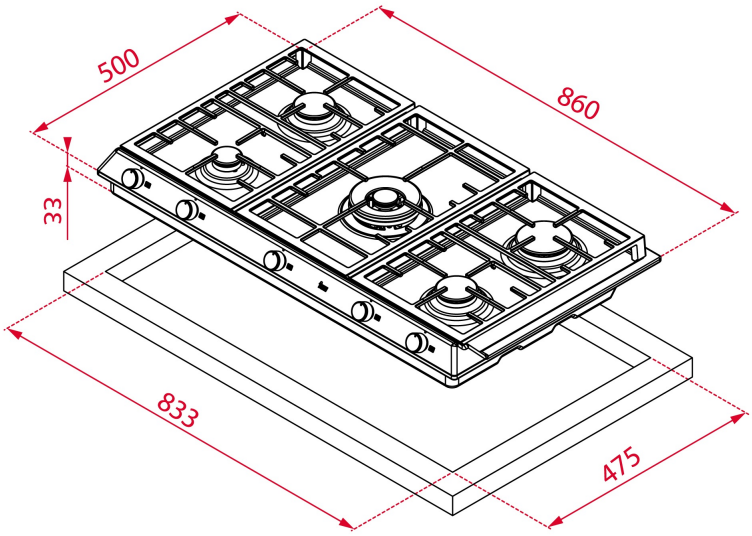

DIMENSIONS

Product height (mm): 91
Product width (mm): 860
Product depth (mm): 510
Product length (mm):
Net weight (Kg): 14,5

TECHNICAL DETAILS

FITTING MEASURES	**Built-in Width (mm):** 833 **Built-in Depth (mm):** 475 **Built-in height (mm):** 45
FEATURES	**Gas type:** Natural&Butane **Maximum nominal power (W) (Gas):** 11500 **Autoignition:** Yes
ELECTRIC CONNECTION	**Frequency (Hz):** 50/60 **Power rate (V):** 220-240 **Cable Connection Length (cm):** 100
COOKING ZONES	**Cooking Zones:** 5
SAFETY SYSTEMS	**Automatic safety disconnection (Auto Lock) (Gas):** Yes
FINISH	**Surface finishing:** Brushed stainless steel

Surface type: Stainless Steel

ACCESSORIES

Grid type: Conected Grid
Wok support: Optional
Junction Kit: Optional
Cast Iron Grids: Yes
Teppan Yaki: NO