EFX 30.1 2G AI AL CI Gas Stainless Steel Hob with frontal control knobs of butane and natural gas in 30 cm

Auto ignition

Autolock

DESCRIPTION	Gas Stainless Steel Hob with frontal control knobs of butane and natural gas in 30 cm
LIFE STYLE	Total
COLOURS	
REFERENCE	REF. 112610047 EAN. 8434778019575

EFX 30.1 2G AI AL CI

FEATURES

Gas hob
Frontal control knobs
2 cooking zones
1 fast ring burner, 2.8 kW
1 auxiliary ring burner, 1 kW
Stainless steel surface
Auto ignition
Auto-lock safety system
Cast iron grids
Maximum nominal power 3800 W
Optional: Wok support

EFX 30.1 2G AI AL CI

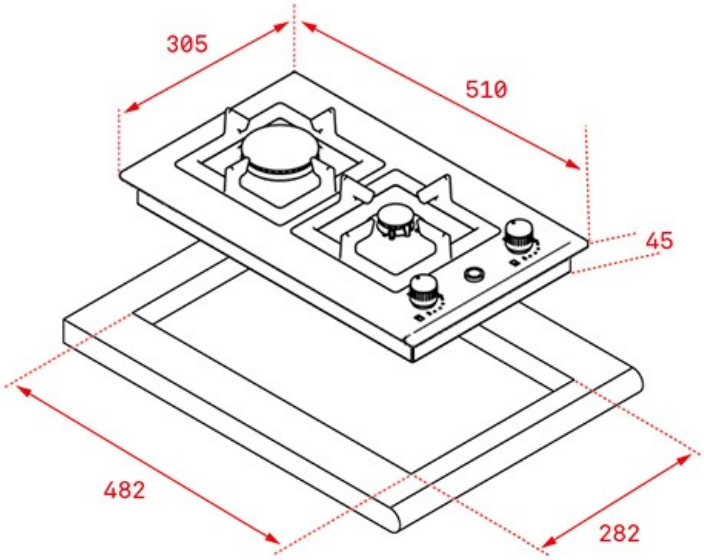

DIMENSIONS

Product height (mm): 91
Product width (mm): 305
Product depth (mm): 510
Product length (mm):
Net weight (Kg): 4,9

TECHNICAL DETAILS

FITTING MEASURES	**Built-in Width (mm):** 282 **Built-in Depth (mm):** 482 **Built-in height (mm):** 45
FEATURES	**Gas type:** Natural&Butane **Maximum nominal power (W) (Gas):** 3800 **Autoignition:** Yes
ELECTRIC CONNECTION	**Frequency (Hz):** 50/60 **Power rate (V):** 220-240 **Cable Connection Length (cm):** 100
COOKING ZONES	**Cooking Zones:** 2
SAFETY SYSTEMS	**Automatic safety disconnection (Auto Lock) (Gas):** Yes

FINISH	**Surface finishing:** Brushed stainless steel **Surface type:** Stainless Steel
ACCESSORIES	**Grid type:** Conected Grid **Wok support:** Optional **Junction Kit:** NO **Cast Iron Grids:** Yes **Teppan Yaki:** NO