MS 622 BIS L Built-in Microwave with ceramic base + Grill

Ceramic base | Defrost By Time | Defrost By Weight | Direct Access Menu | Electronic Door Opening | 22L

DESCRIPTION	Built-in Microwave with ceramic base + Grill
LIFE STYLE	Total
COLOURS	
REFERENCE	REF. 40584100 EAN. 8421152145524

MS 622 BIS L

FEATURES

Built-in Microwave + Grill
Ceramic base with uniform heating
3 cooking functions
2 direct access menus
5 power levels, 2500 W
Grill power: 1200 W
Defrost by time and weight
Touch control display with knobs and minute minder
Double glazed door with right opening
Electronic door opening
Children safety lock
Automatic disconnection when open door
Incandescent inner light
Dropdown grill
Quick start
Capacity (gross/net): 22 / 21.56 litres
Stainless steel cavity
Tangential ventilation

MS 622 BIS L

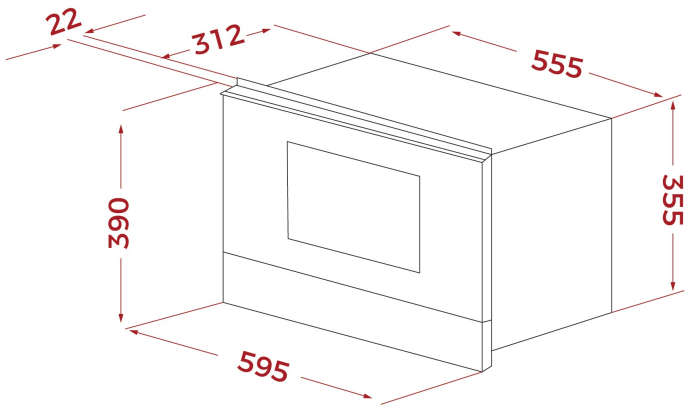

DIMENSIONS

Product height (mm): 390
Product width (mm): 595
Product depth (mm): 334
Product length (mm):
Net weight (Kg): 23,2

TECHNICAL DETAILS

FEATURES

Certificates: CE/CB
Number of cavities: 1
Type of inner light: INCANDESCENT
Inside light position: RIGHT
Number of cooking functions: 3
Grill function: Yes
Drop-down grill: Yes
Number of guide levels (lower cavity): 0
Forced refrigeration tangential 1 speed: Yes
Microwave function: Yes
Microwave + Grill function: Yes
Number of power levels: 5
Minute Quick Start: Yes
Seconds Quick Start: Yes
Tangential ventilation: Yes

ELECTRIC CONNECTION

Maximum Nominal Power (W): 2700
Frequency (Hz): 50
Power rate (V): 220-240
Cable Connection Length (cm): 110

	Plug: Yes **Inside light Consumption (W):** 20
ENERGY CONSUMPTION	**Energy consumption per cycle in conventional mode (kWh):** 0.36 **Grill (W):** 1200 **Maxi Grill (W):** 1200 **Cooling Fan Motor (W):** 18
SAFETY SYSTEMS	**Automatic disconnection when opening the door:** Yes **Panel blocking system:** Yes **Children safety block option:** Yes **Grill protection:** Yes **Safety Thermostat:** Yes
ACCESSORIES	**Glass Tray:** 0
ENERGY EFFICIENCY	**Energy Efficiency Index (EEI):** A