FOT 939 Professional Kitchen Mixer with swivel and flexible spout

Saving Water | Anti-Scale Aerator | High Resistance | Pull Down Shower | Resistance | Swivel Spout | Easy_Quick

DESCRIPTION	Professional Kitchen Mixer with swivel and flexible spout
LIFE STYLE	Maestro
COLOURS	
REFERENCE	REF. 116010002 EAN. 8434778002812

FOT 939

FEATURES

Professional kitchen tap
Swivel and flexible spout
Anti-scale aerator
Pull-down shower 2 functions: normal & shower spray
Cartridge with ceramic discs of high resistance
Highly precise temperature control
Greater handling sensitivity with smoother movements
High resistant flexible spring
Stainless steel flexible hose reinforced with plastic for better protection and easy cleaning
Easy-Quick fixation system
3/8" - 1/2" flexible inlet pipes

FOT 939

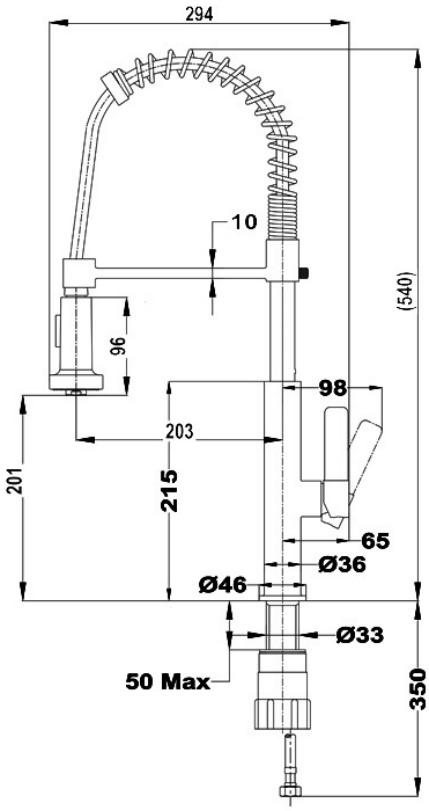

DIMENSIONS

Product height (mm): 540
Product width (mm):
Product depth (mm): 294
Product length (mm):
Net weight (Kg): 1,62

TECHNICAL DETAILS

MODELS	**Type of installation:** Free standing