# **Stone 45 S-TG 1B 1D** Inset Tegranite sink with one bowl and one drainer

200mm depth | Colour Intensity | Easy Clean | Food safe | High resistance

| | |
|---|---|
| **DESCRIPTION** | Inset Tegranite sink with one bowl and one drainer |
| **LIFE STYLE** | Maestro |
| **COLOURS** | |
| **REFERENCE** | REF. 115330055<br>EAN. 8434778006636 |

# Stone 45 S-TG 1B 1D

**FEATURES**

Tegranite+ sink
One bowl and one drainer
Inset installation
3½" automatic basket waste with siphon
200 mm deep bowl
45 cm base unit

# Stone 45 S-TG 1B 1D

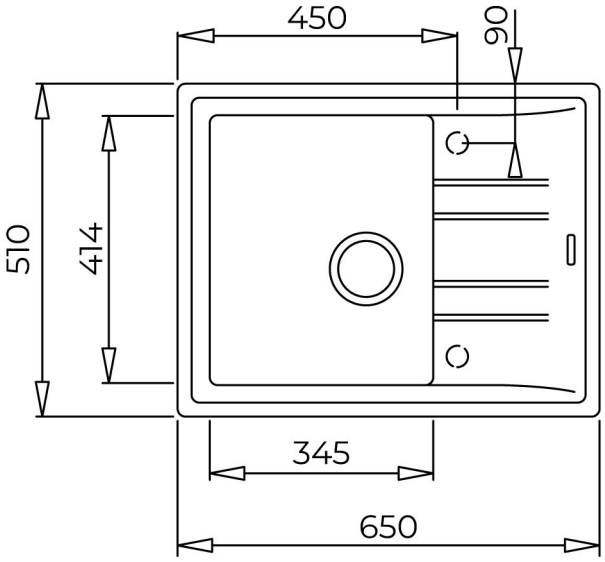


## DIMENSIONS

**Product height (mm):**
**Product width (mm):** 510
**Product depth (mm):** 200
**Product length (mm):** 650
**Net weight (Kg):** 10,5

## TECHNICAL DETAILS

| | |
|---|---|
| **MAIN BOWL** | **Main Bowl Length (mm):** 345<br>**Main Bowl Width (mm):** 414<br>**Main Bowl Depth (mm):** 200 |
| **OTHER FEATURES** | **Material:** Tegranite+<br>**Type of installation:** Inset<br>**Number of tap holes:** Pre-Drilled<br>**Valve hole type:** 3½"<br>**Overflow hole:** Round<br>**Sink Bowl / Top thickness (mm):** 10/7 |
| **OTHERS** | **Base unit (cm):** 45 |
| **SINK LAY OUT** | **Number of bowls:** 1 |

**Number of drainers:** 1
**Drainer position:** Reversible

**ACCESSORIES**

**Installation clips:** Yes
**Siphon:** Yes