Universe 60 T-XP 1B Inset stainless steel sink in 60 cm

Antibacterial

Lifetime warranty

DESCRIPTION	Inset stainless steel sink in 60 cm
LIFE STYLE	Total
COLOURS	
REFERENCE	REF. 115010012 EAN. 8434778015164

Universe 60 T-XP 1B

FEATURES

Universe Series
Stainless steel sink, Polished finish
One bowl
Inset installation
3½" manual basket waste and siphon
155 mm deep bowl
60 cm base unit

Universe 60 T-XP 1B

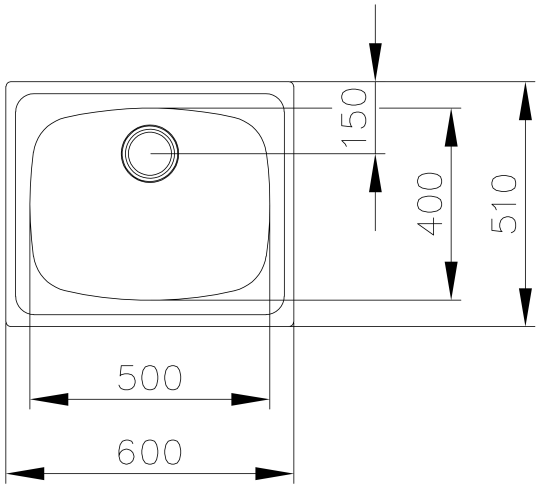

DIMENSIONS

Product height (mm):
Product width (mm): 510
Product depth (mm): 155
Product length (mm): 600
Net weight (Kg): 2,5

TECHNICAL DETAILS

MAIN BOWL	**Main Bowl Length (mm):** 500 **Main Bowl Width (mm):** 400 **Main Bowl Depth (mm):** 155
OTHER FEATURES	**Material:** Stainless Steel **Type of installation:** Inset **Valve hole type:** 3½" **Overflow hole:** Round **Sink Bowl / Top thickness (mm):** 0,7
OTHERS	**Base unit (cm):** 60
SINK LAY OUT	**Number of bowls:** 1 **Number of drainers:** 0
ACCESSORIES	**Soundproof:** Yes

Installation clips: Yes
Siphon: Yes