American Professional 80 M-XP 1B 3-in-1 Installation stainless steel sink with one bowl and SilentSmart

200mm depth

Antibacterial

DESCRIPTION	3-in-1 Installation stainless steel sink with one bowl and SilentSmart
LIFE STYLE	Maestro
COLOURS	
REFERENCE	REF. 115000056 EAN. 8434778019230

American Professional 80 M-XP 1B

FEATURES

American Professional Series
Stainless steel sink, Polished finish
Apron front sink
One bowl
3-in-1 installation possibilities: undermount, top or flush
3½” SQ manual basket waste with siphon
Decorative SQ cover
SilentSmart, 50% less noise
200 mm deep bowl
80 cm base unit

American Professional 80 M-XP 1B

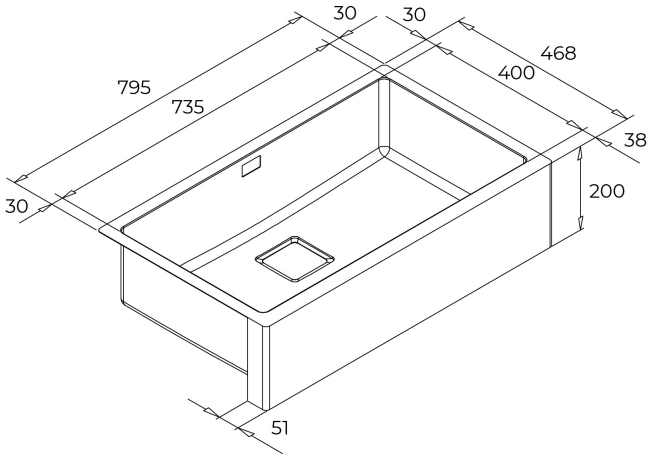

DIMENSIONS

Product height (mm):
Product width (mm): 468
Product depth (mm):
Product length (mm): 795
Net weight (Kg): 10,72

TECHNICAL DETAILS

MAIN BOWL	**Main Bowl Length (mm):** 735 **Main Bowl Width (mm):** 400 **Main Bowl Depth (mm):** 200
OTHER FEATURES	**Material:** Stainless Steel **Type of installation:** Top,Flush,Undermount **Valve hole type:** 3½" SQUARED **Overflow hole:** Rectangular **Sink Bowl / Top thickness (mm):** 1,0
OTHERS	**Base unit (cm):** 80
SINK LAY OUT	**Number of bowls:** 1 **Number of drainers:** 0
ACCESSORIES	**Soundproof:** Yes

SilentSmart: Yes
Installation clips: Yes
Siphon: Yes