**Nova 60 L-TG 1B 1D** Inset Nova Series sink with one bowl and one drainer

200mm depth | Colour Intensity | Easy Clean | Food safe | High resistance

| | |
|---|---|
| **DESCRIPTION** | Inset Nova Series sink with one bowl and one drainer |
| **LIFE STYLE** | Maestro |
| **COLOURS** | |
| **REFERENCE** | REF. 115330061<br>EAN. 8434778023923 |

# Nova 60 L-TG 1B 1D

**FEATURES**

Nova Series
Tegranite+ sink
One bowl and one drainer
Inset installation
3½” automatic waste basket with siphon
HelixPro waste basket
200 mm deep bowl
60 cm base unit

# Nova 60 L-TG 1B 1D

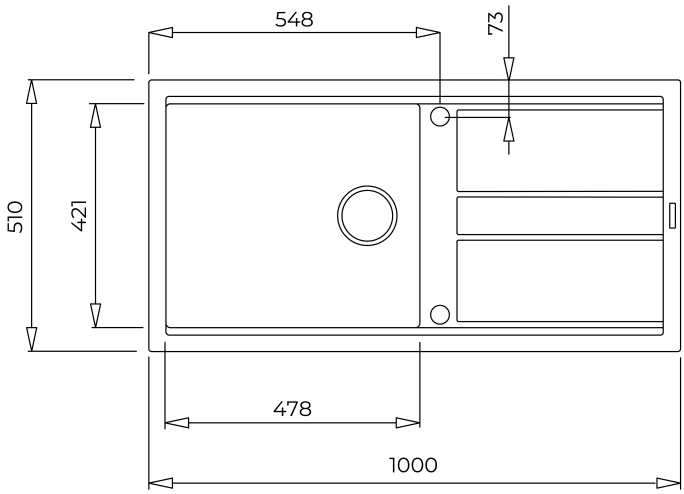


## DIMENSIONS

**Product height (mm):**
**Product width (mm):** 510
**Product depth (mm):**
**Product length (mm):** 1000
**Net weight (Kg):** 15,68

## TECHNICAL DETAILS

| | |
|---|---|
| **MAIN BOWL** | **Main Bowl Length (mm):** 478<br>**Main Bowl Width (mm):** 421<br>**Main Bowl Depth (mm):** 200 |
| **OTHER FEATURES** | **Material:** Tegranite+<br>**Type of installation:** Inset<br>**Number of tap holes:** Pre-Drilled<br>**Valve hole type:** 3½"<br>**Overflow hole:** Round |
| **OTHERS** | **Base unit (cm):** 60 |
| **SINK LAY OUT** | **Number of bowls:** 1<br>**Number of drainers:** 1<br>**Drainer position:** Reversible |

| | |
|---|---|
| **ACCESSORIES** | **Installation clips:** Yes<br>**Siphon:** Yes |