TT 6415

Vitroceramic with 4 cooking zones, touch control and slim metal frame

Autolock

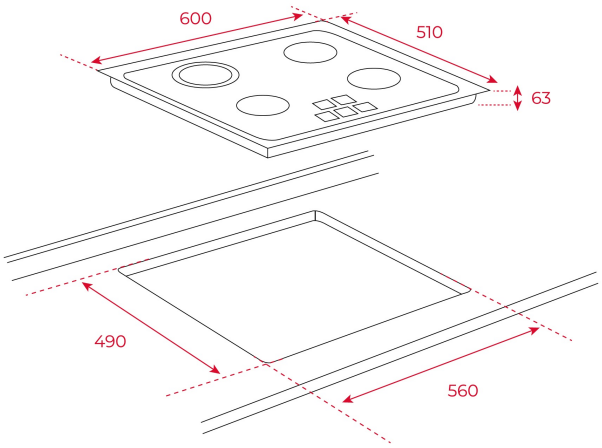

REFERENCE

REF: 40239041 EAN: 8421152148273

FEATURES

Vitroceramic hob
Touch Control
4 cooking zones
1 high lights Ø 210 mm
1 high lights Ø 180 mm
2 high lights Ø 145 mm
Ceramic glass surface
Auto-lock safety system
Residual heat indicator
Maximum nominal power 6300 W

DIMENSIONS

Product height (mm): 63
Product width (mm): 600
Product depth (mm): 510
Product length (mm):
Net weight (Kg): 8,5

TECHNICAL DETAILS

Power rate (V): 230
Frequency (Hz): 50/60
Maximum Nominal Power (W): -

COLOURS

40239041 Black glass

ENERGY EFFICIENCY

Power consumption in standby mode (W): -
Time to reach standby mode (min): -