TGI2 200 NF EU

No Frost built-in larder freezer with inverter motor, antibacterial gasket and reversible door

Motor Inverter | Easy 90 | Full No Frost

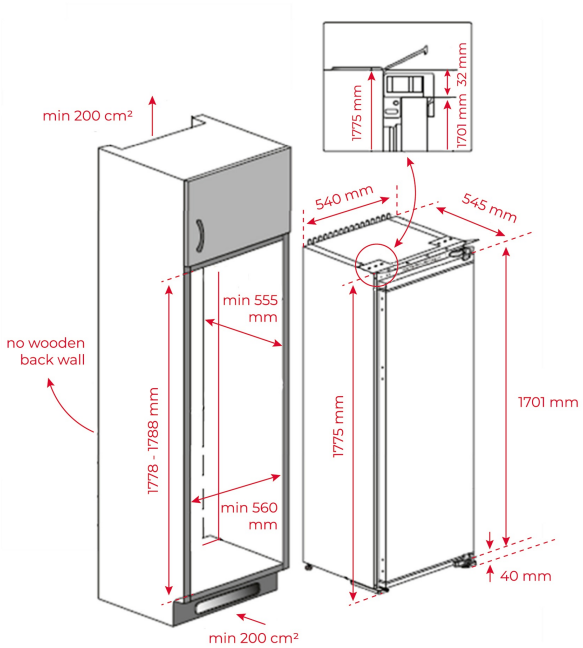

REFERENCE

REF: 113500002 EAN: 8434778014167

FEATURES

Built-in freezer
Full No Frost
Inner control display
Electronic adjustable thermostat
Fast freezing function
Front adjustable feet
Reversible doors
Climate class: SN/ST
Total capacity (gross/net): 220 / 196 litres
Ice cube tray included

DIMENSIONS

Product height (mm): 1775
Product width (mm): 540
Product depth (mm): 545
Product length (mm):
Net weight (Kg): 63

TECHNICAL DETAILS

Energy efficiency class (UE 2019/2016): A+
Climate Class: SN/ST
Energy Consumption (Kw/day): 0,825
Annual Consumption (kWh/year): 301
Freezing Capacity: 10
Noise Level (dBA): 39
Power rate (V): 220-240
Frequency (Hz): 50

COLOURS