CNL 6415 PLUS G1

Infinity G1 built-in hood. Special edition by Italdesign Giugiaro, 60cm

LED

Stop Delay Timer

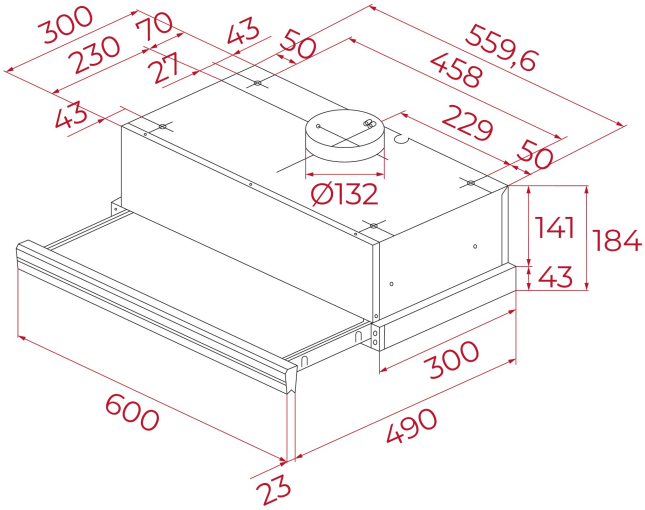

REFERENCE

REF: 113060002 EAN: 8434778033076

FEATURES

Infinity G1 special edition
Designed in Italy by Italdesign Giugiaro
Decorative vertical hood
Exclusive matte black finishing
Pull-out hood
EcoPower motor
Energy Efficiency class: A
Electronic control panel
5+1 speeds
Exhaust capacities:
Free Outlet, m³/h: 393
Qboost, m3/h: 385
Max., m3/h: 293
Min., m³/h: 141
Noise (LwA) Boost Speed, dB: 69
Noise (LwA) Max Speed, dB: 64
Noise (LwA) Min Speed, dB: 52
1 LED lamp
2 stainless Steel filters MMX
Automatic Lighting
Exchangeable Front Panel
Stop delay timer

DIMENSIONS

Product height (mm): 184
Product width (mm): 600
Product depth (mm): 300/490
Product length (mm):
Net weight (Kg): 7,26

TECHNICAL DETAILS

Energy Efficiency Class: A
Noise (LwA) Min Speed (dB): 52
Noise (LwA) Max Speed (dB): 64
Noise (LwA) Boost Speed (dB): 69
Ø Outlet (mm): 120

COLOURS

113060002 Black glass