# **IC 915** Single lever Kitchen Tap with high spout Swivel Aerator

Anti-Scale Aerator

Swivel Spout

| | |
|---|---|
| **DESCRIPTION** | Single lever Kitchen Tap with high spout Swivel Aerator |
| **LIFE STYLE** | Total |
| **COLOURS** | |
| **REFERENCE** | REF. 33915020W<br>EAN. 8421152091357 |

# IC 915

**FEATURES**

High spout kitchen tap
Flat design
Swivel Spout
Anti-scale aerator
Cartridge with ceramic discs of high resistance
Highly precise temperature control
Greater handling sensitivity with smoother movements
3/8" flexible inlet pipes

# IC 915

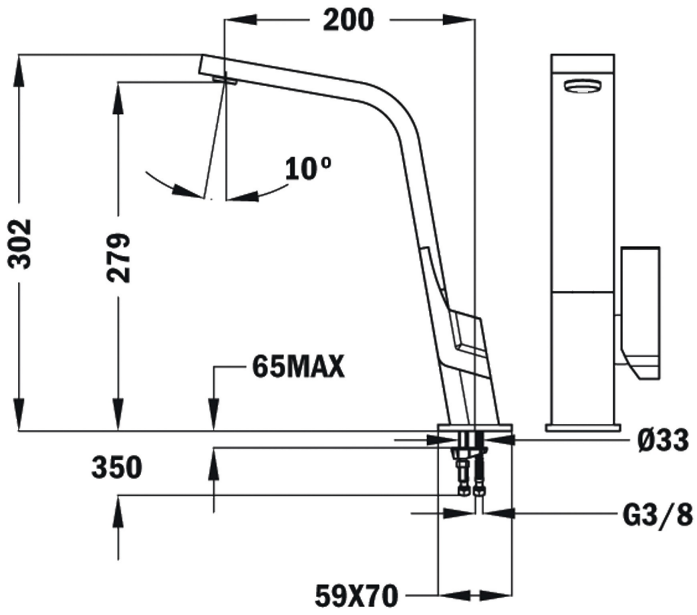


## DIMENSIONS

**Product height (mm):** 302
**Product width (mm):**
**Product depth (mm):**
**Product length (mm):**
**Net weight (Kg):** 2,4

## TECHNICAL DETAILS

| | |
|---|---|
| **MODELS** | **Type of installation:** Free standing |