ICC 915 Metallic Edition single lever tap with swivel spout

Fingerprint-Proof | Anti-Scale Aerator | Swivel Spout | PVD

DESCRIPTION	Metallic Edition single lever tap with swivel spout
LIFE STYLE	Total
COLOURS	
REFERENCE	REF. 116030005 EAN. 8434778002980

ICC 915

FEATURES

Metallic Edition, Titanium Collection
High spout kitchen tap
Swivel Spout
Anti-scale aerator
Cartridge with ceramic discs of high resistance
Highly precise temperature control
Greater handling sensitivity with smoother movements
Surface resistant to daily use (PVD)
3/8" - 1/2" flexible inlet pipes

ICC 915

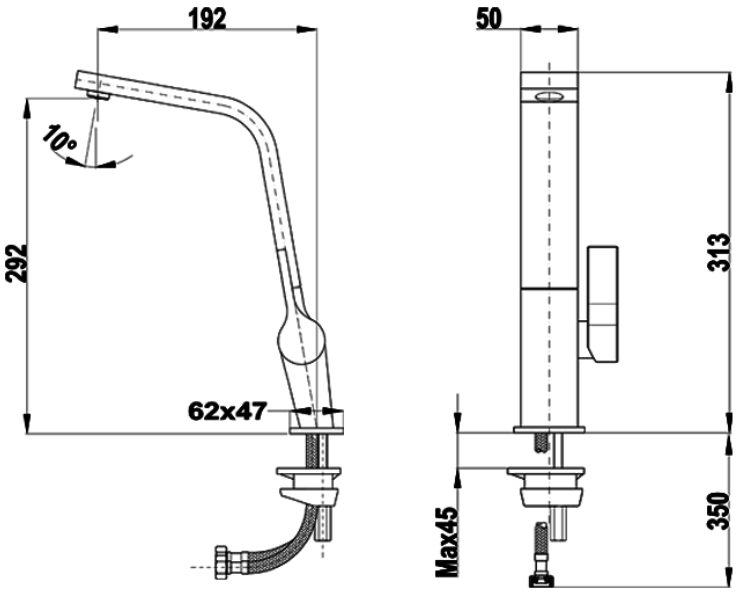

DIMENSIONS

Product height (mm): 313
Product width (mm):
Product depth (mm):
Product length (mm):
Net weight (Kg): 1,65

TECHNICAL DETAILS

MODELS	**Type of installation:** Free standing