# SP 995 1/2" CHROME

Kitchen faucet mixer with high swivel spout and aerator anticalcáreo





Anti-Scale Aerator



Swivel spout

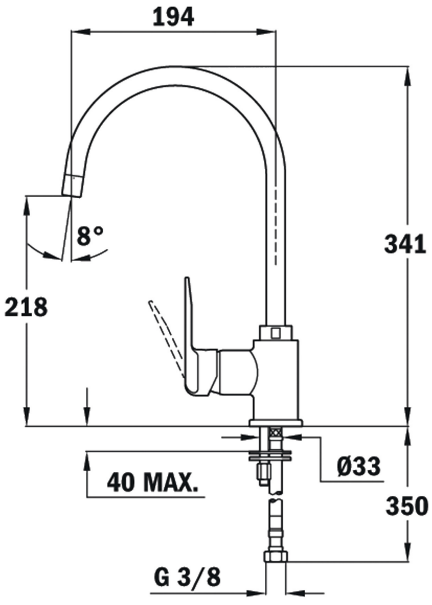


## REFERENCE

**REF:** 559950210 **EAN:** 8421152097687

## FEATURES

Swivel spout
Anti-scale aerator
3/8" flexible inlet pipes
For ½" connection versions please check with your sales contact person

## DIMENSIONS

**Product height (mm):** 341
**Product width (mm):**
**Product depth (mm):**
**Product length (mm):**
**Net weight (Kg):** 1,55

## COLOURS

| | | |
|---|---|---|
| | 559950210 | Chrome |
| | 55995020Q | Metallic Black |
| | 55995020CN | Carbon |