# STONE 50 B-TG 1B 1D WHITE

Inset Tegranite Sink with one bowl and one drainer





Main bowl depth: 200mm



Colour Intensity



Easy Clean



Food safe



High resistance

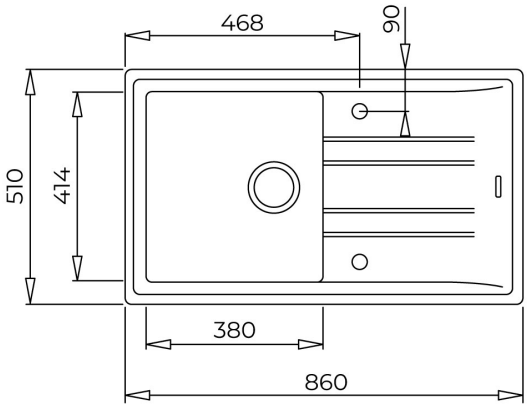


## REFERENCE

**REF:** 115330019 **EAN:** 8434778005981

## FEATURES

Tegranite+ sink
1 bowl and 1 drainer
High resistance surface to impacts, thermal shocks and high temperatures
Excellent UV resistance against decoloring
Bacteria-free surface very easy to clean
Inset installation
Reversible drainer
80% quartz and resins
3½" manual basket waste with overflow and siphon
200 mm deep bowl
50 cm base unit

## DIMENSIONS

**Product height (mm):**
**Product width (mm):** 510
**Product depth (mm):** 200
**Product length (mm):** 860
**Net weight (Kg):** 11,5

## COLOURS

| | | |
|---|---|---|
| | 115330019 | White |
| | 115330015 | Carbon |
| | 115330014 | Metallic Grey |