BROOKLYN 60 M-XP 1B 1D PLUS REV 2Ø AUTO WST

Top/Flush reversible stainless steel sink with one bowl and one drainer

REFERENCE

REF: 115100023 EAN: 8434778019643

FEATURES

Brooklyn Series
Stainless steel sink, Polished finish
One bowl, one drainer, reversible
2-in-1 installation possibilities: top or flush
V-control 3½” automatic waste basket with siphon
New HelixPRO waste basket
SilentSmart, 50% less noise
210 mm deep bowl
60 cm base unit

Antibacterial

DIMENSIONS

Product height (mm):
Product width (mm): 504
Product depth (mm):
Product length (mm): 984
Net weight (Kg): 6,1

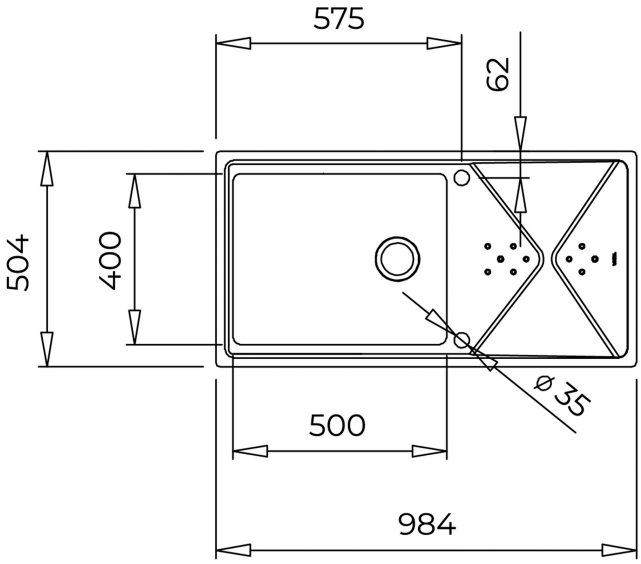

COLOURS

115100023 Stainless Steel