LI5 1080 (Washer)
Built-In Washing Machine with 15 washing programs

Quick Cycle

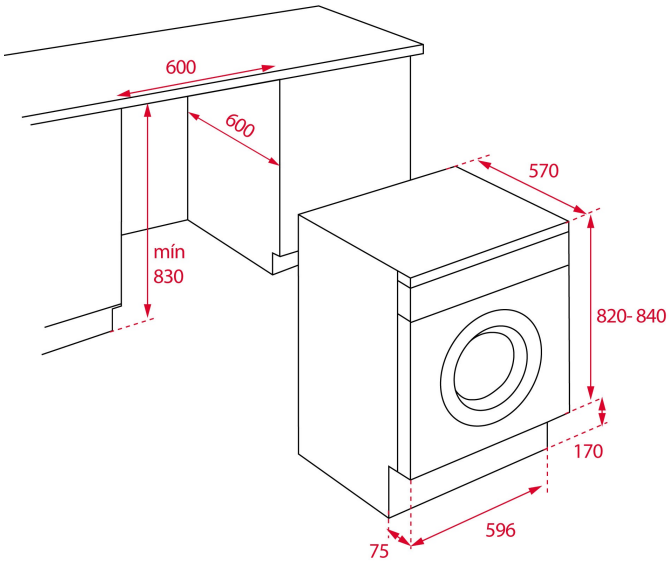

REFERENCE

REF: 114000005 EAN: 8434778018554

FEATURES

Built-in Washing Machine
Electronic control panel
Washing capacity: 8 kg
15 washing programs
Fast program: 14 minutes
Special programs: ECO mode, Delicate
Delay timer function
SmartWash system
Maximum spinning speed: 1000 RPM
Automatic water regulation
Automatic door lock safety system
Child lock
SoftCare drum
Delay timer: 1-24 hours
30 cm wide porthole door

DIMENSIONS

Product height (mm): 820
Product width (mm): 596
Product depth (mm): 570
Product length (mm):
Net weight (Kg): 68

TECHNICAL DETAILS

Energy efficiency class (UE 2019/2016): -
Washing performance Class: A
Spinning efficiency class: C
Water consumption (litres/year): 9850
Noise Level (dBA): 56 + 74
Power rate (V): 220-240
Frequency (Hz): 50

COLOURS

114000005 White