EH 60 4G AI AL

Gas Stainless Steel Hob with frontal control knobs of butane and natural gas in 58 cm

Auto ignition

Autolock

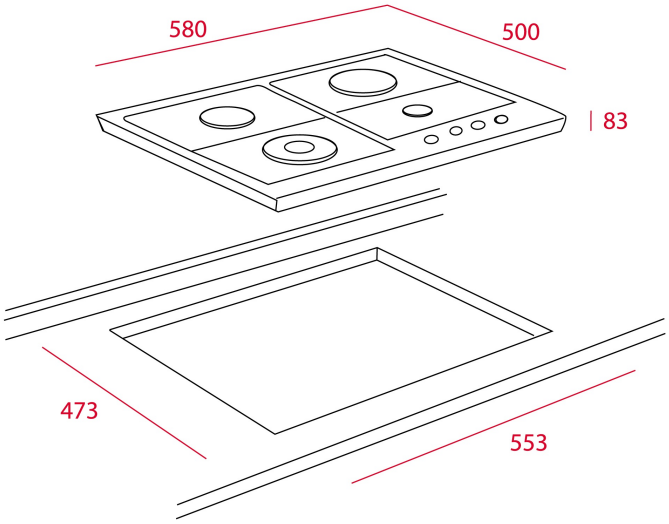

REFERENCE

REF: 112620003 EAN: 8434778018974

FEATURES

Gas hob
Frontal control knobs
4 cooking zones
1 triple ring burner, 3.5 kW
1 fast burner, 3.00 kW
1 semi fast burner, 1.7 kW
1 auxiliary burner, 1 kW
Stainless steel surface
Auto ignition
Auto-lock safety system
Cast iron grids
Maximum nominal power 9250 W

DIMENSIONS

Product height (mm): 84
Product width (mm): 580
Product depth (mm): 500
Product length (mm):
Net weight (Kg): 8,95

TECHNICAL DETAILS

Power rate (V): 220-240
Frequency (Hz): 50/60
Maximum Nominal Power (W): -

COLOURS

112620003 Stainless Steel

ENERGY EFFICIENCY

Power consumption in standby mode (W): -
Time to reach standby mode (min): -