TBC 64010 HOB BK

Vitroceramic hob with touch control

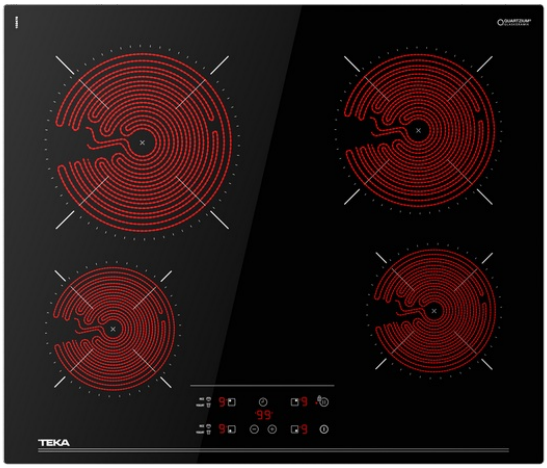

Easy installation

Autolock

Power Plus

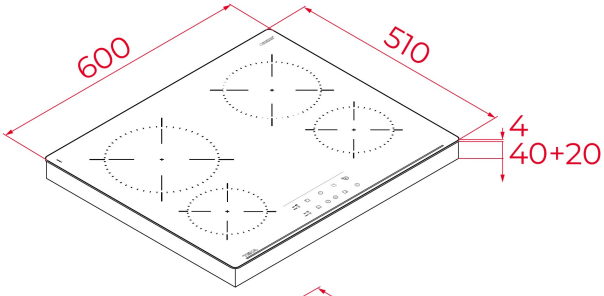

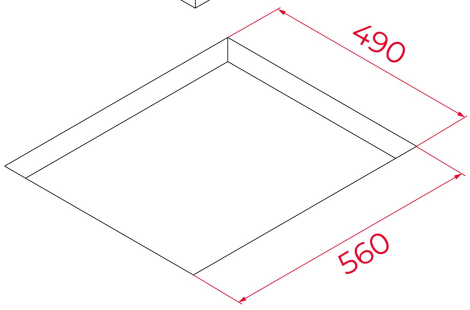

REFERENCE

REF: 112550014 EAN: 8434778019933

FEATURES

Vitroceramic hob Touch control 4 cooking zones: 1 high light Ø 210 mm 1 high light Ø 180 mm 2 high lights Ø 145 mm Ceramic glass surface Auto-lock safety disconnection Cooking timer Child lock Residual heat indicator Maximum nominal power 6300 W

DIMENSIONS

Product height (mm): 63
Product width (mm): 600
Product depth (mm): 510
Product length (mm):
Net weight (Kg): 8,5

TECHNICAL DETAILS

Power rate (V): 220-240
Frequency (Hz): 50/60
Maximum Nominal Power (W): 6300

COLOURS

112550014 Black glass

ENERGY EFFICIENCY

Power consumption in standby mode (W): -
Time to reach standby mode (min): -