DSJ 680
Ultraslim decorative hood with 4 speeds

LED

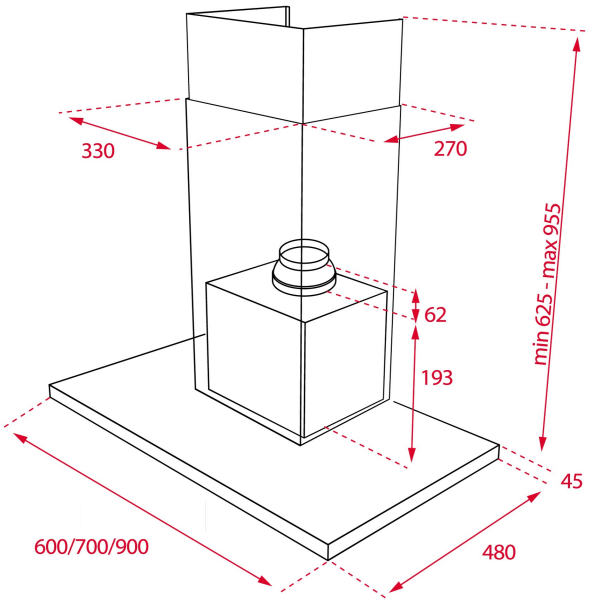

REFERENCE

REF: 40484820 EAN: 8421152157312

FEATURES

Decorative horizontal hood
Push buttons control
4 speeds
Free Outlet exhaust capacity (m3/h): 638
Max speed exhaust capacity (m3/h): 614
Min speed exhaust capacity (m3/h): 268
Max speed sound level (dBA): 66
Min speed sound level (dBA): 48
2 LED lamp
2 Stainless Steel filters
Operating pilot light
Anti-return valve included
Outlet reduction included

DIMENSIONS

Product height (mm): 670-1000
Product width (mm): 600
Product depth (mm): 480
Product length (mm):
Net weight (Kg): 13,37

TECHNICAL DETAILS

Energy Efficiency Class: C
Noise (LwA) Min Speed (dB): 48
Noise (LwA) Max Speed (dB): 66
Noise (LwA) Boost Speed (dB): N/A
Ø Outlet (mm): 150

COLOURS

40484820 Stainless steel