MAESTRO **HLC 8400**

Urban Colors Edition SurroundTemp Compact Multifunction Oven in 45cm with HydroClean® PRO

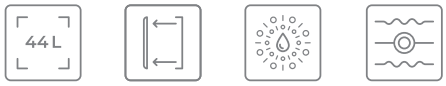

44L | Plus Extension Telescopic Guide | HydroClean | SurroundTemp

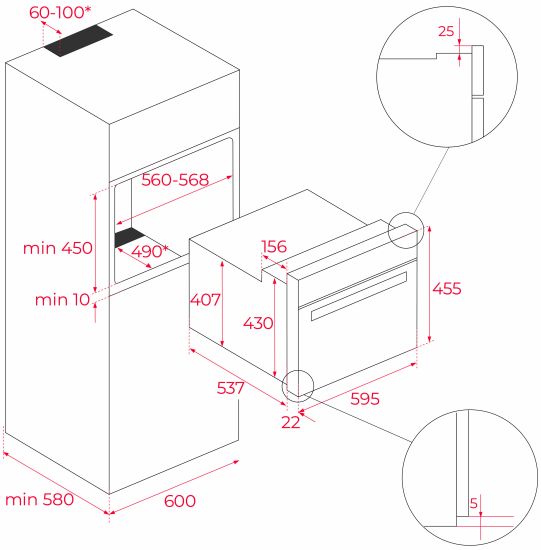

REFERENCE

REF: 111130004 EAN: 8434778007640

FEATURES

Urban Colors Edition
Multifunction SurroundTemp oven
9 cooking functions
Automatic HydroClean system
Touch control display with knobs
Electronic timer (Delay/Start function)
Chrome supports with 3 cooking levels
Plus Extension Telescopic guides
Removable triple glazed door
Manual quick preheating
Anti-tip deep tray and reinforced grid
Capacity (gross/net): 45 / 44 litres

DIMENSIONS

Product height (mm): 455
Product width (mm): 595
Product depth (mm): 537+22
Product length (mm):
Net weight (Kg): 25

TECHNICAL DETAILS

Energy Efficiency Class: A+
Power rate (V): 220-240
Frequency (Hz): 50/60
Maximum Nominal Power (W): 3015

COLOURS

111130004	Stone Grey Glass
111130003	London brick brown glass
111130003	Steam Grey Glass
111130003	White Glass
111130003	Black Glass