TOTAL **HSB 645**

60cm Multifunction SurroundTemp Oven with HydroClean system

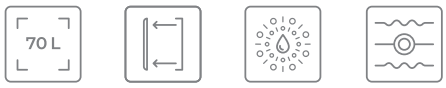

70L | Plus Extension Telescopic Guide | HydroClean | SurroundTemp

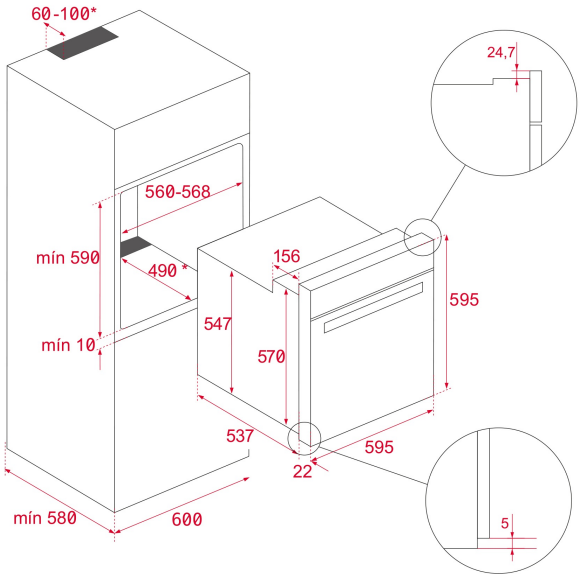

REFERENCE

REF: 41560150 EAN: 8421152148969

FEATURES

Multifunction SurroundTemp oven
9 cooking functions
Automatic HydroClean system
Mechanical control knobs
Electronic timer
Chrome supports with 5 cooking levels
Easy slide telescopic guides
Removable double glazed door
Manual quick preheating
Anti-tip deep tray
Capacity (gross/net): 71 / 70 litres

DIMENSIONS

Product height (mm): 595
Product width (mm): 595
Product depth (mm): 537+22
Product length (mm):
Net weight (Kg): 28

TECHNICAL DETAILS

Energy Efficiency Class: A+
Power rate (V): 220-240
Frequency (Hz): 50/60
Maximum Nominal Power (W): 3215

COLOURS

41560150 Stainless Steel