SteamGourmet HLB 8550 SC
Multifunction CombiSteam oven with 12 cooking functions

70L | Plus extension guides: 75% extraction | HydroClean steam cleaning system | SoftClose | SurroundTemp

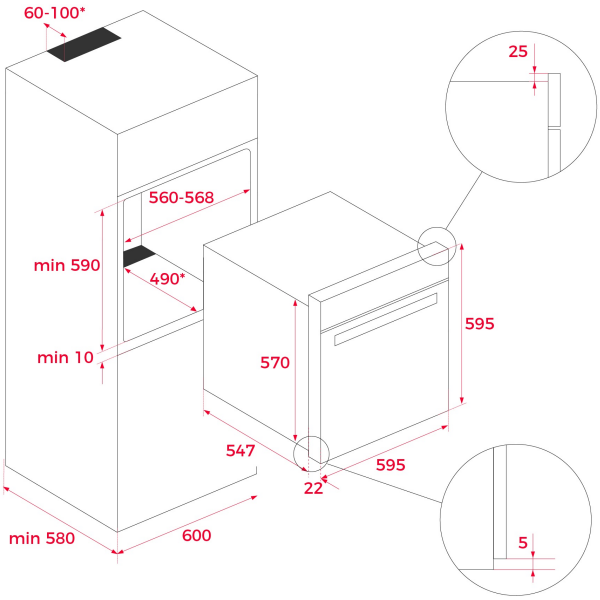

REFERENCE

REF: 111200001 EAN: 8434778024777

FEATURES

Multifunction SurroundTemp steam oven
12 cooking functions
Automatic SteamClean system
Touch control display with knobs
Electronic timer
Chrome supports with 5 cooking levels
Easy slide telescopic guides
Removable triple glazed door
Automatic disconnection security system
SoftClose system
Automatic quick preheating
Anti-tip deep tray
Baking tray and reinforced grid included
Capacity (gross/net): 71 / 70 litres

DIMENSIONS

Product height (mm): 595
Product width (mm): 595
Product depth (mm): 537+22
Product length (mm):
Net weight (Kg): 32

TECHNICAL DETAILS

Energy Efficiency Class: A+
Power rate (V): 220/240
Frequency (Hz): 50/60
Maximum Nominal Power (W): 3215

COLOURS

111200001 Black glass