IBF 95-G1 MST BM

Infinity G1 induction hob. Special edition by Italdesign Giugiaro, 90cm

MultiSlider Autolock Power Power Plus Easy installation

Flex Super Zone

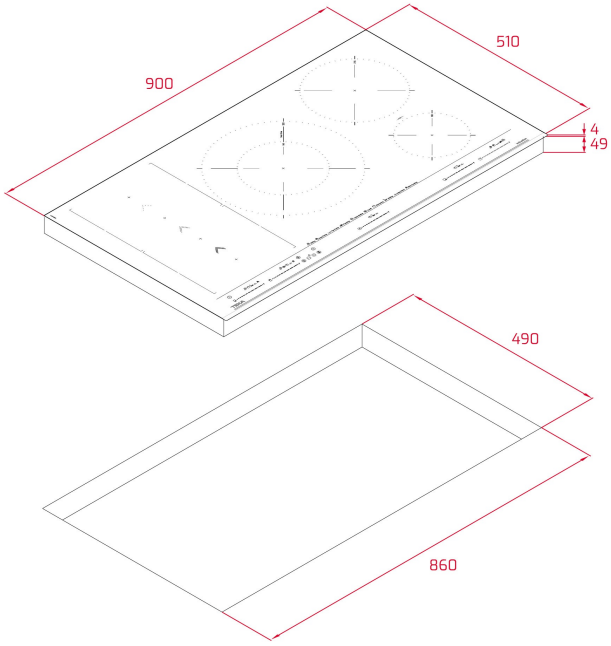

REFERENCE

REF: 112500061 EAN: 8434778030402

FEATURES

Infinity G1 special edition
Designed in Italy by Italdesign Giugiaro
Flex induction hob
Exclusive matte black finishing
Direct functions: Confit, poaching, grilling, pan frying, deep frying, quick boiling, simmering, melting and keep warm
Touch Control MultiSlider
5 cooking zones
2 Flex zones Ø 228 X 200 mm
1 double zone Ø 320/180 mm
1 zone Ø 215 mm
1 zone Ø 150 mm
Ceramic glass surface
Auto-lock safety disconnection
Cooking timer
Power Plus
Child lock
Residual heat indicator
Power management
Easy installation kit
Maximum nominal power 10800 W

DIMENSIONS

Product height (mm): 53
Product width (mm): 900
Product depth (mm): 510
Product length (mm):
Net weight (Kg): 15,18

TECHNICAL DETAILS

Power rate (V): 220-240
Frequency (Hz): 50/60
Maximum Nominal Power (W): 10800

COLOURS

112500061 Black matt

ENERGY EFFICIENCY

Power consumption in standby mode (W): 0.4
Time to reach standby mode (min): 1