HRB 6300 AT 60cm Country Style Edition SurroundTemp Multifunction Oven

70L

Plus Extension Telescopic Guide

HydroClean

SurroundTemp

DESCRIPTION	60cm Country Style Edition SurroundTemp Multifunction Oven
LIFE STYLE	Total
COLOURS	
REFERENCE	REF. 111010010 EAN. 8434778008616

HRB 6300 AT

FEATURES

Country Style Edition
Multifunction SurroundTemp oven
9 cooking functions
Automatic HydroClean system
Mechanical control knobs
Mechanical timer
Chrome supports with 5 cooking levels
Telescopic guides basic
Removable double glazed door
Manual quick preheating
Anti-tip deep tray
Capacity (gross/net): 71 / 70 litres

HRB 6300 AT

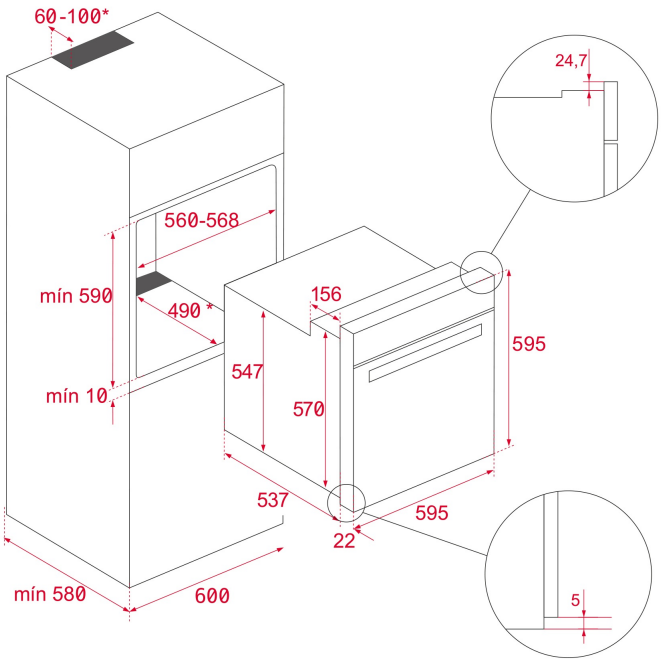

DIMENSIONS

Product height (mm): 595
Product width (mm): 595
Product depth (mm): 537+22
Product length (mm):
Net weight (Kg): 27

TECHNICAL DETAILS

FEATURES

Certificates: N / CE / CCA / CB/ EAC
Number of cavities: 1
Type of inner light: Halogen
Inside light position: RIGHT TOP CORNER
Enamelled cavity: Yes
Min. Temperature Regulator (ºC): 50
Max. Temperature Regulator (ºC): 250
Function selector: 11+0
Number of cooking functions: 9
Number of memories: 2
Top + Bottom function: Yes
Grill function: Yes
MaxiGrill function: Yes
MaxiGrill + Fan function: Yes
Bottom function: Yes
Bottom + TURBO (Pizza) function: Yes
Turbo function: Yes
ECO function: Yes
Mechanical quick heating: Yes
Minute Minder: Yes
Knobs type: Old Brass
Removable chromed tray guides: Yes

Number of guide levels: 5

ELECTRIC CONNECTION

Maximum Nominal Power (W): 3215
Frequency (Hz): 50/60
Power rate (V): 220/240
Cable Connection Length (cm): 150
Plug: Yes
Inside light Consumption (W): 25

ENERGY CONSUMPTION

Energy consumption per cycle in conventional mode (kWh): 0.82
Energy consumption per cycle in fan-forced convection mode (kWh): 0,76
Bottom Heating Element (W): 1150
Grill (W): 1400
Maxi Grill (W): 2500
Traditional (W): 2550
Turbo (W): 2000
Multifunction Turbo (W): 22
Cooling Fan Motor (W): 18

SAFETY SYSTEMS

Grill protection: Yes
Anti-tip tray system: Yes
Safety Thermostat: Yes

CLEANING SYSTEM

Crystal Clean Enamel (Slippery): Yes
Hydroclean PRO: Yes

ACCESSORIES

Baking Tray: 1
Deep Tray (50 mm): 1
Standard grid: 1
Baking Tray (lower cavity): 1
Deep Tray (lower cavity) (50 mm): 1

ENERGY EFFICIENCY

Energy Efficiency Class: A
Energy Efficiency Index (EEI): 81

HRB 6300 AT
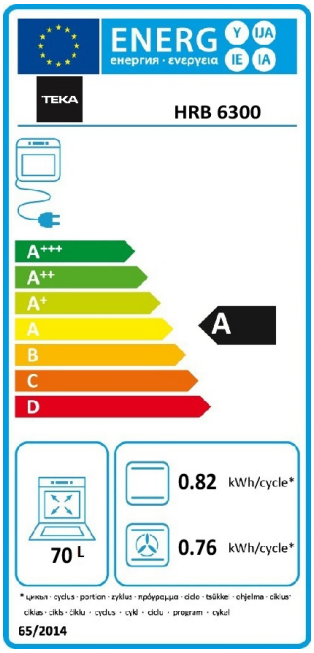
ENERGY LABEL