FS 502 4VE Free Standing Cooker with 4 zones and electric oven in 50cm

DESCRIPTION	Free Standing Cooker with 4 zones and electric oven in 50cm
LIFE STYLE	Easy
COLOURS	
REFERENCE	REF. 40297957 EAN. 8421152156216

FS 502 4VE

FEATURES

Free standing cooker
Electric hob
3 cooking zones
1 high lights Ø 180 mm
2 high lights Ø 140 mm
3 cooking functions
Maximum nominal power: 7615 W
Oven heat source: Electric
Oven capacity: 48 litres
Safety thermostat
Removable double glazed door
Inner light
Chromed supports with 4 cooking levels
1 baking tray

FS 502 4VE

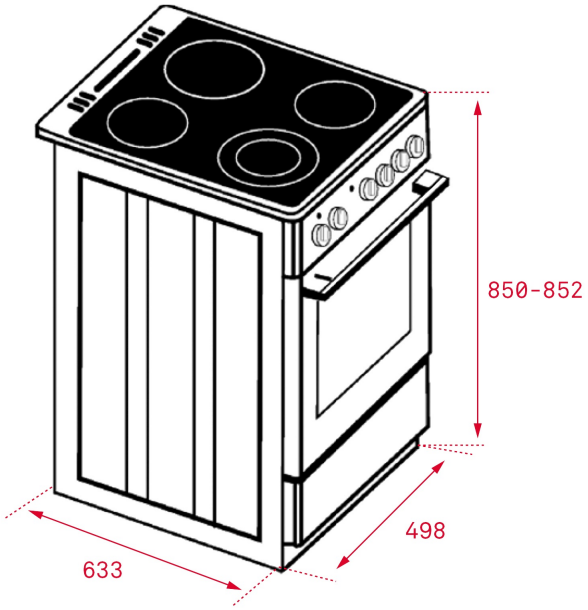

DIMENSIONS

Product height (mm): 852
Product width (mm): 498
Product depth (mm): 633
Product length (mm):
Net weight (Kg): 31

TECHNICAL DETAILS

FINISH	**Surface type:** Vitroceramic
ELECTRIC CONNECTION	**Maximum Nominal Power (W):** 7615 **Frequency (Hz):** 50 **Power rate (V):** 380-415 3N **Cable Connection Length (cm):** 150 **Inside light Consumption (W):** 15
ENERGY CONSUMPTION	**Bottom Heating Element (W):** 1000 **Grill (W):** 800 **Traditional (W):** 1800 **Maximum nominal power (W) (Oven):** 1800
ENERGY EFFICIENCY	**Energy Efficiency Class:** A

FS 502 4VE
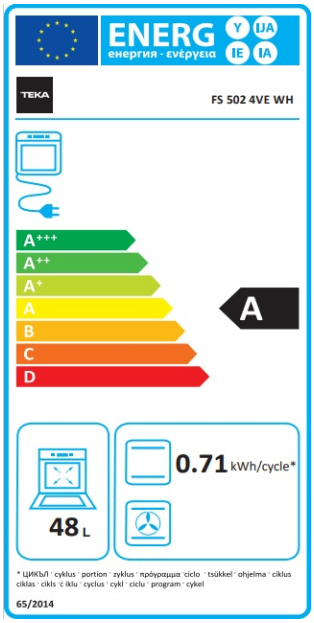
ENERGY LABEL