Vita 915 Kitchen Tap Mixer with high swivel spout

Anti-Scale Aerator

Swivel Spout

DESCRIPTION	Kitchen Tap Mixer with high swivel spout
LIFE STYLE	Easy
COLOURS	
REFERENCE	REF. 249150200 EAN. 8421152076460

Vita 915

FEATURES

High spout kitchen tap
Swivel spout
Anti-scale aerator
Cartridge with ceramic discs of high resistance
Highly precise temperature control
Greater handling sensitivity with smoother movements
3/8" flexible inlet pipes

Vita 915

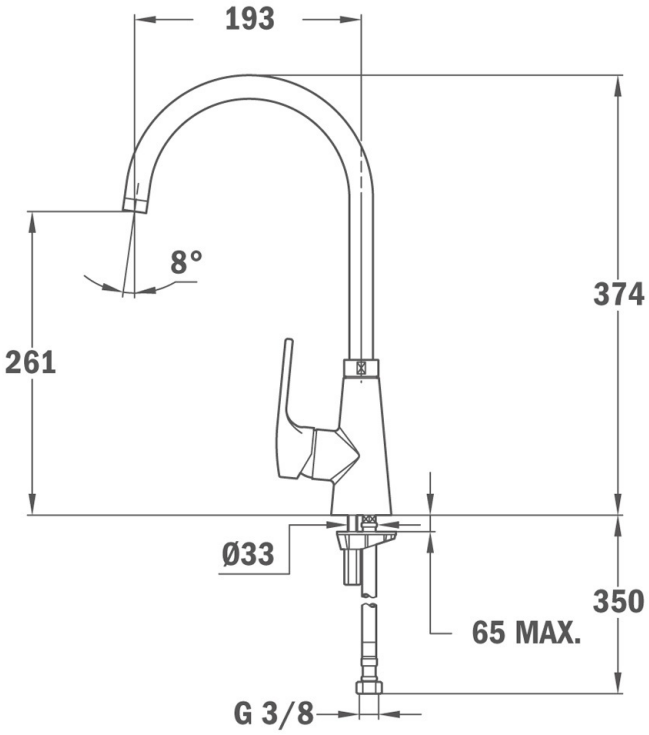

DIMENSIONS

Product height (mm): 374
Product width (mm):
Product depth (mm):
Product length (mm):
Net weight (Kg): 1,57

TECHNICAL DETAILS

MODELS	**Type of installation:** Free standing