MTP 913 Single Lever Kitchen Tap with low swivel spout

Anti-Scale Aerator

Swivel Spout

DESCRIPTION	Single Lever Kitchen Tap with low swivel spout
LIFE STYLE	Easy
COLOURS	
REFERENCE	REF. 469130200 EAN. 8421152084724

MTP 913

FEATURES

Low spout kitchen tap
Swivel spout
Anti-scale aerator
Cartridge with ceramic discs of high resistance
Highly precise temperature control
Greater handling sensitivity with smoother movements
3/8" flexible inlet pipes

MTP 913

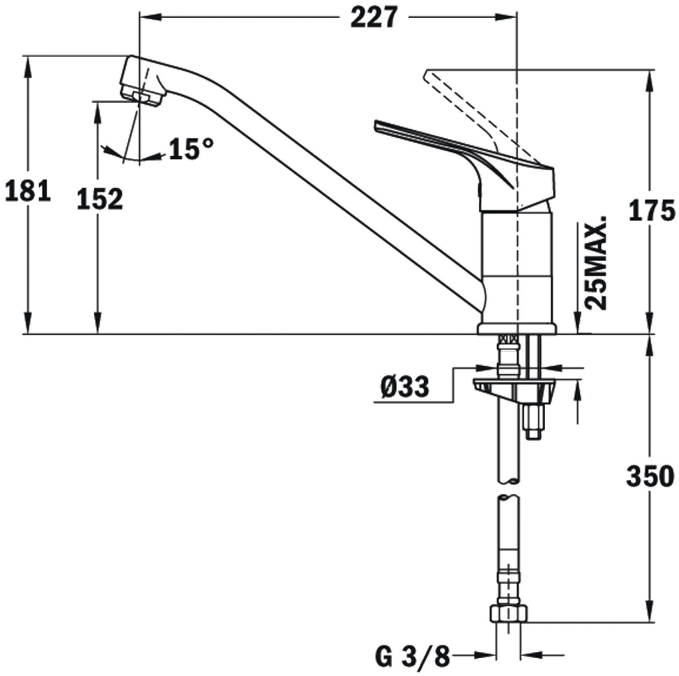

DIMENSIONS

Product height (mm): 181
Product width (mm):
Product depth (mm):
Product length (mm):
Net weight (Kg): 1,02

TECHNICAL DETAILS

MODELS	**Type of installation:** Free standing