FO 939 Professional Kitchen Tap Mixer with flexible spring

Saving Water | Anti-Scale Aerator | High Resistance | Pull Down Shower | Swivel Spout

DESCRIPTION	Professional Kitchen Tap Mixer with flexible spring
LIFE STYLE	Maestro
COLOURS	
REFERENCE	REF. 629390200 EAN. 8421152131541

FO 939

FEATURES

Professional kitchen tap
Swivel and flexible spout
Anti-scale aerator
Pull-down shower 1 function: aerated spray
High resistant flexible spring
Stainless steel flexible hose
Cartridge with ceramic discs of high resistance
Highly precise temperature control
Greater handling sensitivity with smoother movements
3/8" flexible inlet pipes

FO 939

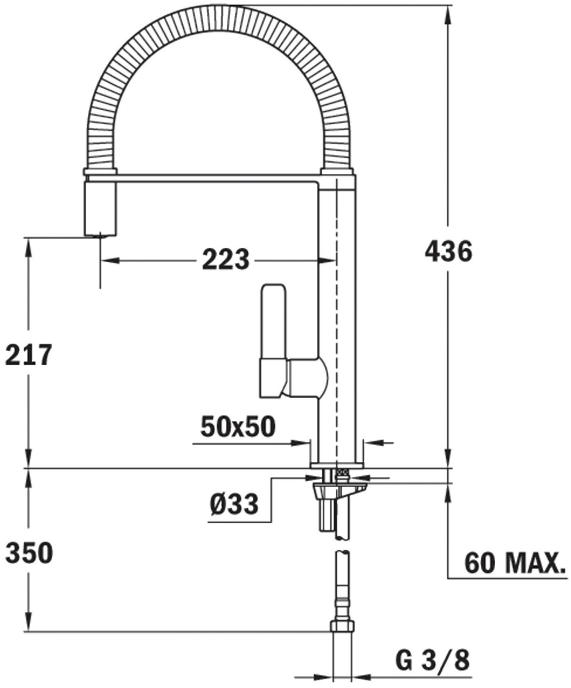

DIMENSIONS

Product height (mm): 436
Product width (mm):
Product depth (mm):
Product length (mm):
Net weight (Kg): 2,91

TECHNICAL DETAILS

MODELS	**Type of installation:** Free standing