TFI3 130 D 85cm A++ Built-in Refrigerator

Easy 90, opening on its own axis for a perfect installation

LED lighting

DESCRIPTION	85cm A++ Built-in Refrigerator
LIFE STYLE	Total
COLOURS	
REFERENCE	REF. 40695051 EAN. 8421152114353

TFI3 130 D

FEATURES

Built-under refrigerator
Mechanical control panel
4* freezer
Manual defrost
Safety glass shelves
Door on door installation
Reversible door
Energy Class: A++
Climate Class: SN-T
Total capacity: 125 litres
Net capacity (fridge): 105 + 18 litres

TFI3 130 D

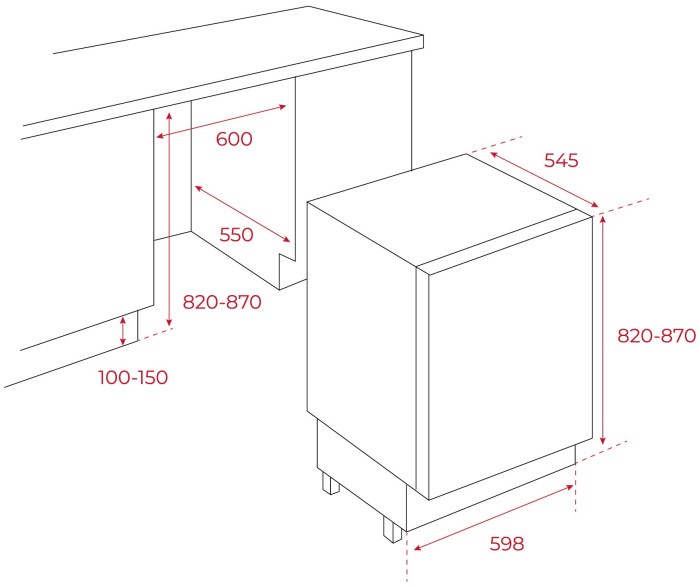

DIMENSIONS

Product height (mm): 818
Product width (mm): 595
Product depth (mm): 545
Product length (mm):
Net weight (Kg): 29

TECHNICAL DETAILS

FITTING MEASURES	**Built-in niche (cm):** 82
PRODUCT SHEET	**Cooling system:** Defrost **Total gross capacity (litres):** 125 **Refrigerator compartment capacity (litres):** 92 **Freezer compartment capacity (litres):** 15 **Freezer classification:** 4 **Freezing capacity:** 2 **Temperature Rise Time (h):** 10 **Climate class:** SN/T **Noise level (dB):** 39
POWER SUPPLY	**Frequency (Hz):** 50 **Power rate (V):** 230 **Power rate (W):** 65 **Energy consumption (kw/day):** 0,378 **Plug type:** European **Cable Connection Length (cm):** 193

FEATURES	**Type of installation:** Built-in **Automatic defrosting in the refrigeration compartment:** Yes **Control panel:** Mechanical **Antibacterial treatment:** NO **Cooling set button:** Yes **Inner light:** Yes **Type of inner light:** LED BULB **Reversible doors:** Yes
EQUIPMENT	**Chromed bottle rack:** NO **Antibacterial gasket:** Yes **Multipurpose compartment:** NO **Ice cubes tray:** 1 **Bottle rack type:** NO **Adjustable feet front:** Yes **Roller (rear):** Yes **Number of shelves:** 2 **Refrigerator adjustable shelves:** Yes **Vegetable drawers:** 0

TFI3 130 D
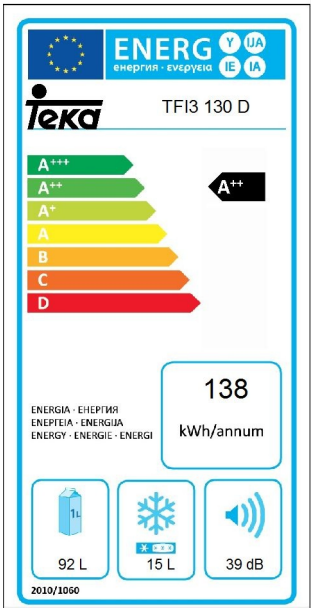
ENERGY LABEL