TK3 1490 Freestanding washer-dryer

Quick cycle program

6Kg washing capacity

9Kg washing capacity

DESCRIPTION	Freestanding washer-dryer
LIFE STYLE	Total
COLOURS	
REFERENCE	REF. 40878060 EAN. 8421152119594

TK3 1490

FEATURES

Freestanding washer-dryer
Washing capacity: 9 Kg
Dryer capacity: 6 Kg
Programs: 9 + 6(Wash+Dry)
LCD Electronic control panel
Delay timer:1-25 hours
Temperature and speed selector
Spinning Speed: 1400 rpm
Intense & Extra rinse programs
Fast Program 12 min.
Stainless steel drum
Indicator pilots on display for : On/Off, Delay, Reminding Time, Temperature and rpm.
33 cm side crystal door with 165º door opening
Energy class: A/A

TK3 1490

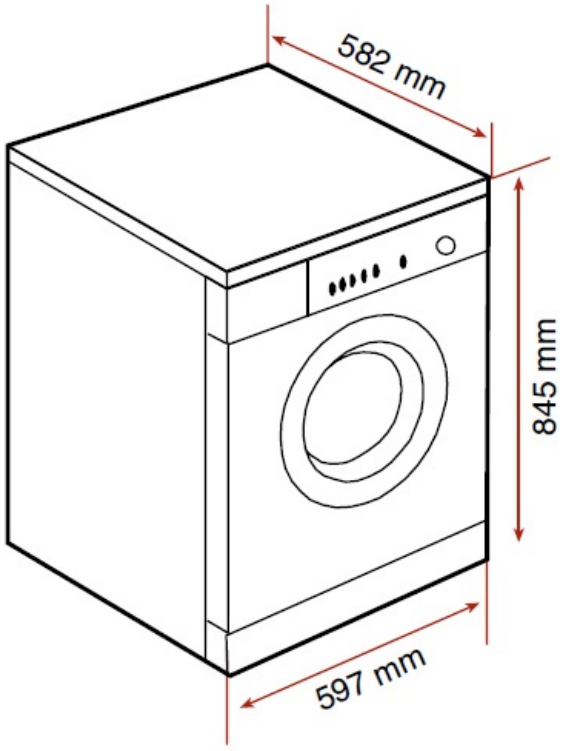

DIMENSIONS

Product height (mm): 845
Product width (mm): 597
Product depth (mm): 582
Product length (mm):
Net weight (Kg): 78

TECHNICAL DETAILS

PRODUCT SHEET

Type of installation: Free standing
Drying capacity (Kgs): 6
Energy consumption (kWh/year): 210
Water consumption (litres/year): 9800
Certificates: CE + IMQ + VDE

POWER SUPPLY

Frequency (Hz): 50
Power rate (V): 220-240
Plug type: No
Cable Connection Length (cm): No
Maximum Nominal Power (W): 2200
Nominal power motor (W): 200
Power of heating element (W): 1850

FEATURES

Stainless Steel Drum: Yes
Glass door diameter (cms): 47
Number of programs: 11
Number Of Washing Temperatures: YES
Control panel: ELECTRONIC

Electronic washing management: Yes
Child lock: Yes
Auto lock door: Yes
Cancel spin cycle button: Yes
Removable work top: Yes

CONTROL INDICATOR LIGHTS

Selected program indicator: Yes
Remaining time: Yes
Drying: Yes
Dryer timer: Yes
Extra rinse indicator: Yes

SPECIAL FUNCTIONS

Fast program: Yes
Fast program (minutes): 12
Economic program: Yes
Intense program: Yes
Delayed Timer (h): YES
Extra rinse: Yes
Delicate fabrics: Yes
Resistant: Yes
Quick Wash: Yes

EQUIPMENT

Adjustable Feet Back: Yes
Adjustable feet front: Yes

TK3 1490

ENERGY LABEL

Energy — Washer-Dryer

Manufacturer	Teka
Model	TK3 1490 WD
More efficient (A–G) / Less efficient	A
Energy consumption (to wash and dry a full capacity wash load at 60°C) kWh	6.12
Washing (only) kWh	0.90
Actual energy consumption will depend on how the appliance is used	
Washing performance (A: higher G: lower)	A B C D E F G
Spin speed (rpm)	1400
Capacity (cotton) kg — Washing	9.0
Capacity (cotton) kg — Drying	6.0
Water consumption (total) ℓ	112
Noise (dB(A)re 1 pW) — Washing	58
Noise — Spinning	77
Noise — Drying	64

Further information is contained in product brochures.

Norm EN 50229

Washer-drier Label Directive No 96/60/EC.