HLB 860 Multifunction SurroundTemp A+ oven with cooking assistant

70L capacity

Plus extension telescopic guide

HydroClean

SoftClose

SurroundTemp, extra rear resistance for a uniform cooking

DESCRIPTION	Multifunction SurroundTemp A+ oven with cooking assistant
LIFE STYLE	Maestro
COLOURS	
REFERENCE	REF. 41560091 EAN. 8421152154755

HLB 860

FEATURES

Multifunction SurroundTemp – 12 Cooking functions
Teka HydroClean®PRO cleaning system
A+ Energy class: up to 20% less consumption
Capacity, gross/net: 71/70 litres
True colour TFT 4 display with digital timer
Personal cooking assistant (20 recipes)
SlowCook function: low temperature cooking
Automatic temperature and time suggestion for each function
Quick heating
Children safety block
Automatic disconnection security system
Triple glazed door
SoftClose system
1 Plus-Extension telescopic guide, 5 cooking levels
Deep & standard enamelled trays and reinforced grid
Tangential ventilation

HLB 860

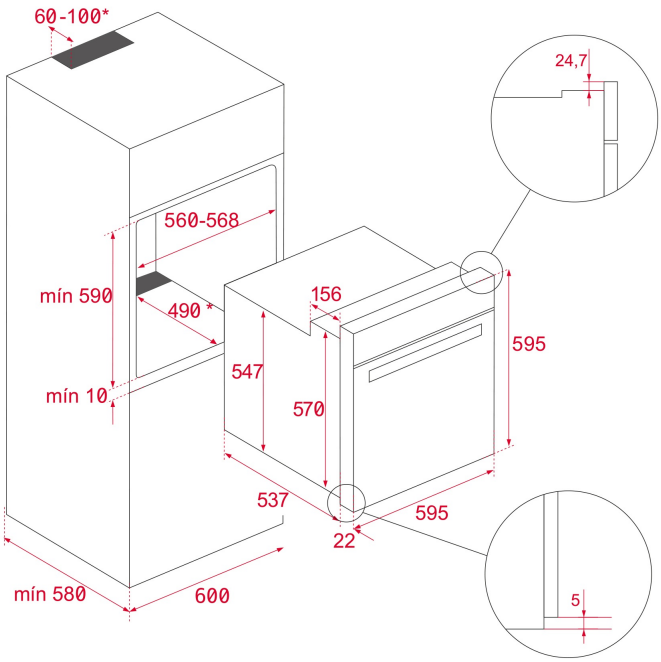

DIMENSIONS

Product height (mm): 595
Product width (mm): 595
Product depth (mm): 537+22
Product length (mm):
Net weight (Kg): 32

TECHNICAL DETAILS

FEATURES

Certificates: N / CE / CCA / CB/ JAS-ANZ
Number of cavities: 1
Type of inner light: Halogen
Inside light position: RIGHT TOP CORNER
Enamelled cavity: Yes
Min. Temperature Regulator (ºC): 30
Max. Temperature Regulator (ºC): 270
Function selector: ELECTRONIC
Number of cooking functions: 12
Number of recipes: 20
Top + Bottom function: Yes
Grill + Bottom function: Yes
Grill function: Yes
MaxiGrill function: Yes
Top + Bottom + Fan function: Yes
Bottom function: Yes
Bottom + TURBO (Pizza) function: Yes
Turbo function: Yes
ECO function: Yes
Ferment function: Yes
Automatic quick heating: Yes
Slow Cook: Yes

Knobs type: MMX FIX ROTATIVE
Ring illuminated: Yes
Removable chromed tray guides: Yes
Number of guide levels: 5
Easy slide telescopic guides: Yes
Drop-down grill: Yes
Forced refrigeration tangential 1 speed: Yes
SoftClose: Yes

ELECTRIC CONNECTION

Maximum Nominal Power (W): 3215
Frequency (Hz): 50/60
Power rate (V): 220-240
Cable Connection Length (cm): 110
Inside light Consumption (W): 25

ENERGY CONSUMPTION

Energy consumption per cycle in conventional mode (kWh): 0.83
Energy consumption per cycle in fan-forced convection mode (kWh): 0,68
Bottom Heating Element (W): 1150
Grill (W): 1400
Maxi Grill (W): 2500
Traditional (W): 2550
Turbo (W): 2000
Multifunction Turbo (W): 22
Cooling Fan Motor (W): 18

SAFETY SYSTEMS

Automatic disconnection when opening the door: Yes
Panel blocking system: Yes
Children safety block option: Yes
Grill protection: Yes
Anti-tip tray system: Yes
Safety Thermostat: Yes

CLEANING SYSTEM

Crystal Clean Enamel (Slippery): Yes
Hydroclean PRO: Yes

ACCESSORIES

Baking Tray: 1
Deep Tray (50 mm): 1
Steak tray: 0
Reinforced grid: 1

ENERGY EFFICIENCY

Energy Efficiency Class: A+
Energy Efficiency Index (EEI): 81

HLB 860
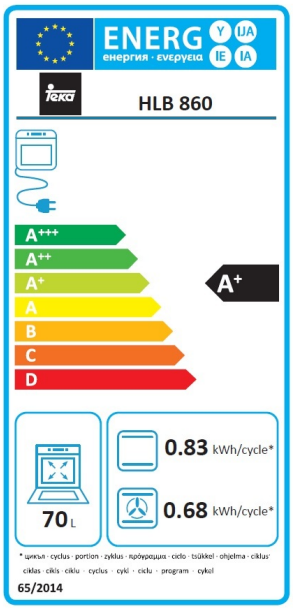
ENERGY LABEL