DBB 60 60cm Wall-mounted Pyramid-shaped Extractor Hood

LED

LED lighting

DESCRIPTION	60cm Wall-mounted Pyramid-shaped Extractor Hood
LIFE STYLE	Easy
COLOURS	
REFERENCE	REF. 40460402 EAN. 8421152069622

DBB 60

FEATURES

Pyramidal decorative hood
Push buttons control panel
Operating Pilot Light
Conventional aspiration
3 speeds
Exhaust capacities:
Free Outlet (m^3/h): 850
Max. (m^3/h): 780
Min. (m^3/h): 240
Noise (LwA) Max Speed 56 dB
Noise (LwA) Min Speed 48 dB
Incandescent Lamps
3 aluminum filters

TEKA

DBB 60

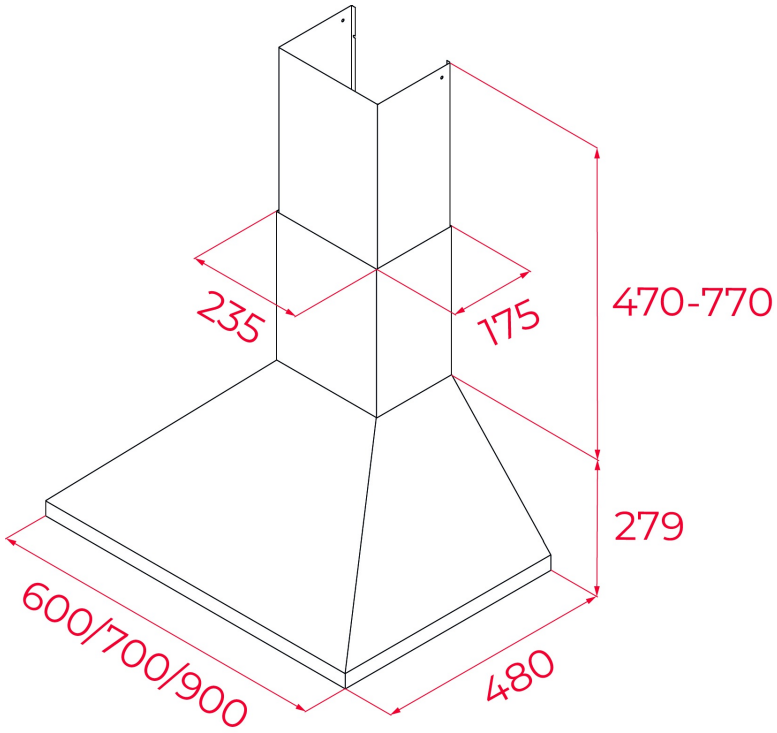

DIMENSIONS

Product height (mm): 749-1049
Product width (mm): 600
Product depth (mm): 480
Product length (mm):
Net weight (Kg): 6,9

TECHNICAL DETAILS

FEATURES

Certificates: CE; CB
Ø Outlet (mm): 150
Type of inner light: LED
Inside light Consumption (W): 5
Plug type: European plug
Power rate (V): 220-240
Frequency (Hz): 50/60
Total hood power (W): 115
Number of motors: 1
Motor power (W): 105
Air flow (Qmin) m3/h: 234
Air flow (Qmax): 380
Air flow (Qboost): 0

ACCESSORIES

Anti Return valve: Yes
Outlet reduction: Yes
Optional Charcoal Filter: C1RTK
Regenerative charcoal filter: R1RTK
Conventional recirculation kit (opt) - w/tube cover: CFH 15200 L2C
Regenerative recirculation kit (opt) - w/tube cover: RFH 15200

	L2C
MODELS	**Number of filters:** 2 **Filter description:** Aluminum **Control panel:** Rectangular Push Buttons **Number of speeds:** 3

DBB 60
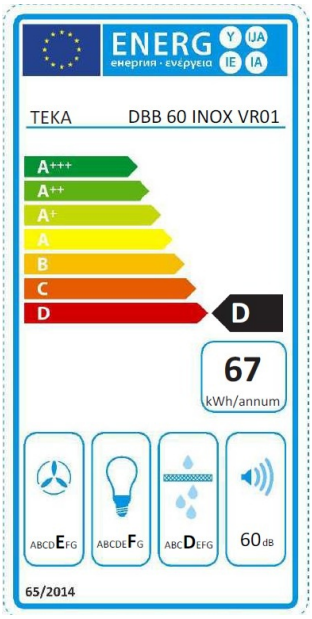
ENERGY LABEL