EASY **DBP 60 PRO EEC/EU**

60cm Pyramidal Decorative Hood with 4 speeds

LED

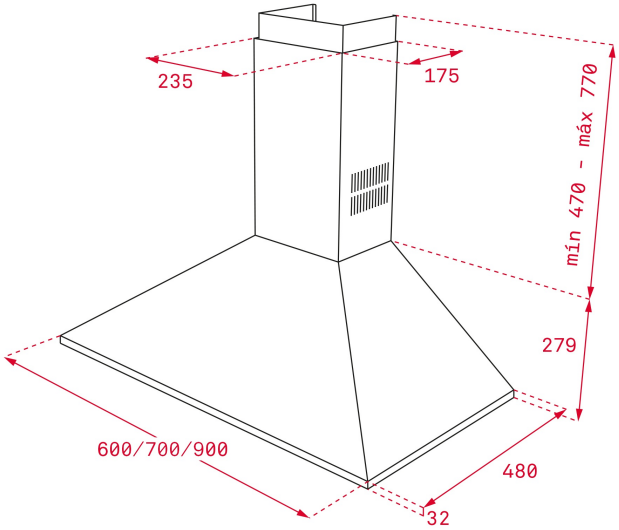

REFERENCE

REF: 40460509 EAN: 8421152133705

FEATURES

Decorative pyramidal hood
Push buttons control
4 speeds
Free Outlet exhaust capacity (m3/h): 650
Max speed exhaust capacity (m3/h): 614
Min speed exhaust capacity (m3/h): 268
Max speed sound level (dBA): 68
Min speed sound level (dBA): 55
2 LED lamps
2 Stainless Steel filters
Operating pilot light
Anti-return valve included
Outlet reduction included
Optional recirculation kit with tube cover installation: SET 1/M1
Optional Charcoal Filter: D4C

DIMENSIONS

Product height (mm): 749-1049
Product width (mm): 600
Product depth (mm): 480
Product length (mm):
Net weight (Kg): 7,4

TECHNICAL DETAILS

Energy Efficiency Class: C
Noise (LwA) Min Speed (dB): 55
Noise (LwA) Max Speed (dB): 68
Noise (LwA) Boost Speed (dB): 0
Ø Outlet (mm): 150

COLOURS

40460509 Stainless Steel