MAESTRO **HLC 847 SC**

Compact Multifunction Oven in 45cm with HydroClean system and steamer

44L MeatProbe HydroClean SoftClose SurroundTemp

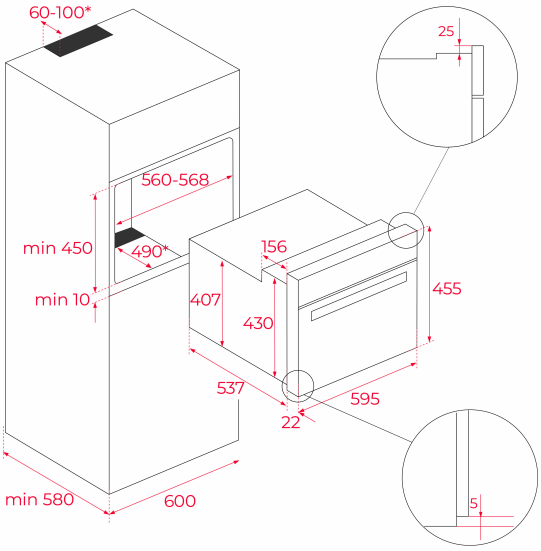

REFERENCE

REF: 40589020 EAN: 8421152145418

FEATURES

Multifunction SurroundTemp oven + Steamer
15 cooking functions
Temperature range 30-100 ºC
1 litre water tank
Automatic HydroClean system
Touch control display with knobs
Electronic timer (Delay/Start function)
Personal cooking assistant: 20 automatic programs
Slow cook, sterilization and regeneration function
Chrome supports with 5 cooking levels
Removable quadruple glazed door
SoftClose system
Automatic disconnection security system
Children safety lock
Automatic quick preheating
Anti-tip deep tray, anti-tip gastronorm tray and reinforced grid
MeatProbe included
Capacity (gross/net): 45 / 44 litres

DIMENSIONS

Product height (mm): 455
Product width (mm): 595
Product depth (mm): 559
Product length (mm):
Net weight (Kg): 28

TECHNICAL DETAILS

Energy Efficiency Class: A+
Power rate (V): 220-240
Frequency (Hz): 50/60
Maximum Nominal Power (W): 3000

COLOURS

40589020 Black Glass with StainlessSteel frame