MAESTRO **MaestroPizza HLB 8510 P**

MaestroPizza pyrolytic oven with special pizza function 340ºC

70L DualClean Plus Extension Telescopic Guide HydroClean Pyrolysis

SoftClose SurroundTemp

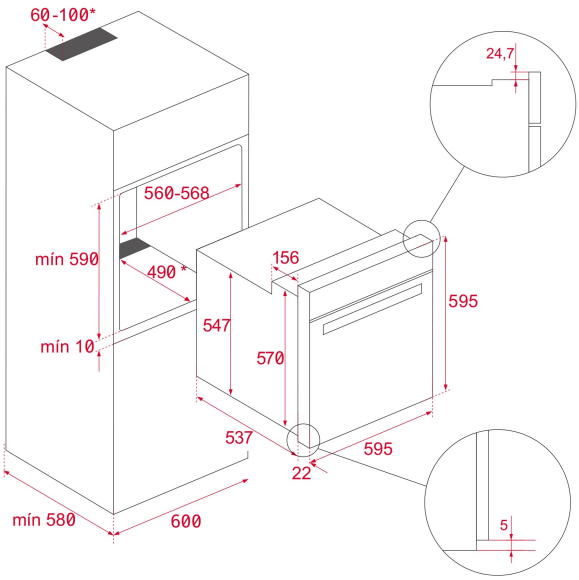


## REFERENCE

REF: 111000046 EAN: 8434778017489

## FEATURES

MaestroPizza oven
Urban Colors Edition
Multifunction SurroundTemp oven
8 cooking functions
Up to 340ºC in cavity for perfect pizza finish
Temprature range for traditional recipes: 50-250º
Pyrolysis self-cleaning system and automatic HydroClean system
Touch control display with knobs
Electronic timer(Delay/Start function)
Chrome supports with 5 cooking levels
Plus Extension Telescopic guides
Removable quadruple glazed door
SoftClose system
Automatic disconnection security system
Children safety lock
Manual quick heating
Anti-tip deep tray, baking tray and reinforced grid
Special pizza stone included
Capacity (gross/net): 71 / 70 litres

## DIMENSIONS

**Product height (mm):** 595
**Product width (mm):** 595
**Product depth (mm):** 537+22
**Product length (mm):**
**Net weight (Kg):** 34

## TECHNICAL DETAILS

Energy Efficiency Class: A+
Power rate (V): 220-240
Frequency (Hz): 50/60
Maximum Nominal Power (W): 3552

## COLOURS

111000046 Black Glass