MAESTRO **INX 939**

Stainless Steel Professional Kitchen Tap Mixer with flexible spring

REFERENCE

REF: 749390200 EAN: 8421152101988

FEATURES

Professional kitchen tap
Swivel and flexible spout
Anti-scale aerator
Pull-down shower 2 functions: normal & shower spray
Made of stainless steel of high quality AISI 304
High resistant flexible spring
Stainless steel flexible hose
Cartridge with ceramic discs of high resistance
Highly precise temperature control
Greater handling sensitivity with smoother movements
3/8" flexible inlet pipes

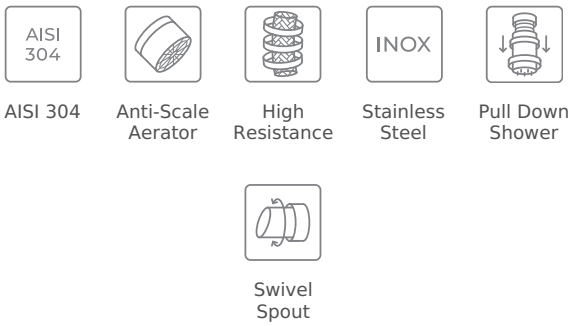

DIMENSIONS

Product height (mm): 550
Product width (mm):
Product depth (mm):
Product length (mm):
Net weight (Kg): 3,4

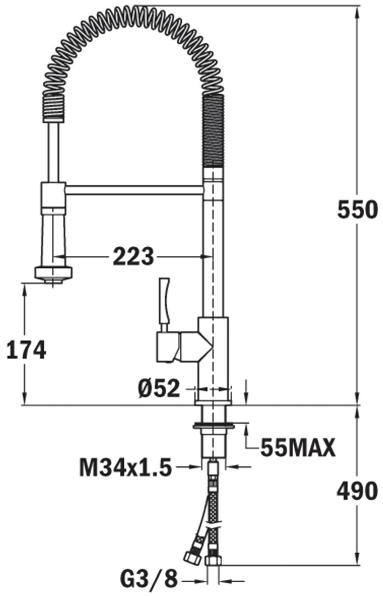

COLOURS

749390200 Stainless Steel