EASY **MTP 913**

Single lever Kitchen Tap with low swivel spout

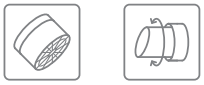

Anti-Scale Aerator

Swivel Spout

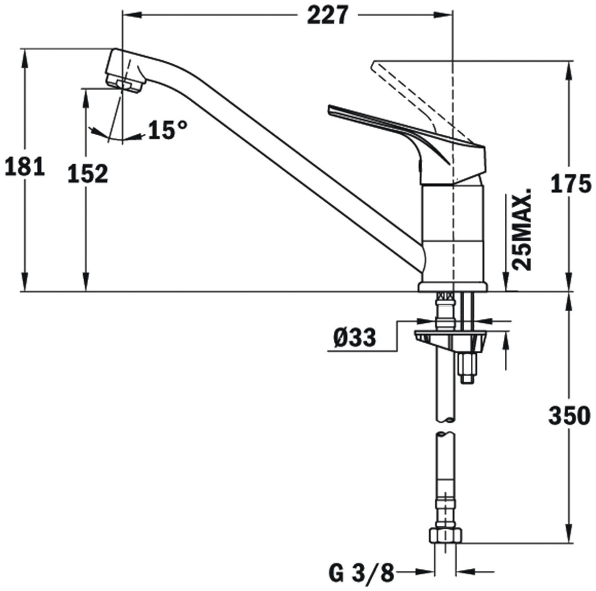

REFERENCE

REF: 46913020Q EAN: 8421152090787

FEATURES

Low spout kitchen tap
Swivel spout
Anti-scale aerator
Cartridge with ceramic discs of high resistance
Highly precise temperature control
Greater handling sensitivity with smoother movements
3/8" flexible inlet pipes

DIMENSIONS

Product height (mm): 181
Product width (mm):
Product depth (mm):
Product length (mm):
Net weight (Kg): 1,17

COLOURS

46913020Q	Metallic Black
469130200	Topasbeige
469130200	Sandbeige
469130200	Carbon
469130200	Chrome