MAESTRO **IN 939**

Professional Kitchen Tap Mixer with flexible spring

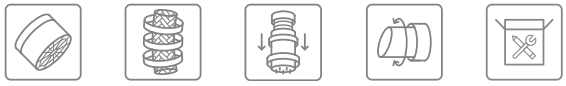

Anti-Scale Aerator | High Resistance | Pull Down Shower | Swivel Spout | Easy_Quick

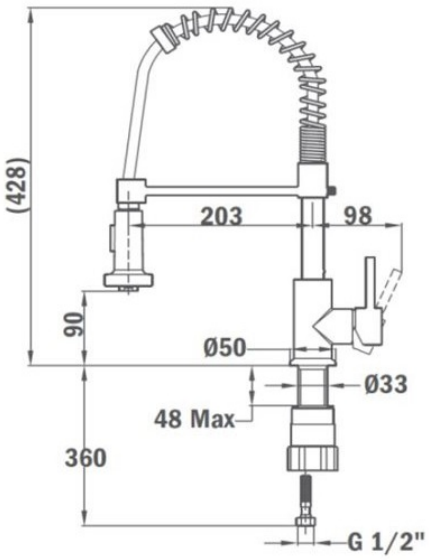

REFERENCE

REF: 539391200 EAN: 8413509220145

FEATURES

Professional kitchen tap
Swivel and flexible spout
Anti-scale aerator
Pull-down shower 2 functions: normal & shower spray
High resistant flexible spring
Stainless steel flexible hose
35 mm cartridge
Cartridge with ceramic discs of high resistance
Highly precise temperature control
Greater handling sensitivity with smoother movements
Easy-Quick fixation system
3/8" certified flexible inlet pipes

DIMENSIONS

Product height (mm): 428
Product width (mm):
Product depth (mm):
Product length (mm):
Net weight (Kg): 1,67

COLOURS

539391200 Chrome