PERFECTA4 DLH 985 T 90cm Decorative Hood with Touch Control Display and ECOPOWER A4 motor

LED | PERFECTA-4 | Stop Delay Timer

DESCRIPTION	90cm Decorative Hood with Touch Control Display and ECOPOWER A4 motor
LIFE STYLE	Maestro
COLOURS	
REFERENCE	REF. 40437100 EAN. 8421152145661

PERFECTA4 DLH 985 T

FEATURES

Decorative horizontal hood
Electronic control with display
EcoPower motor
3 speeds + 1 intensive
Free Outlet exhaust capacity (m3/h): 795
Intensive speed exhaust capacity (m3/h):740
Max speed exhaust capacity (m3/h): 586
Min speed exhaust capacity (m3/h): 306
Intensive speed sound level (dBA): 60
Max speed sound level (dBA): 55
Min speed sound level (dBA): 54
1 LED lamp
3 Stainless Steel filters with 12 layers
Stop delay timer
Filter saturation indicator
Operating pilot light
Exchangeable front panel
Anti-return valve included
Outlet reduction included

PERFECTA4 DLH 985 T

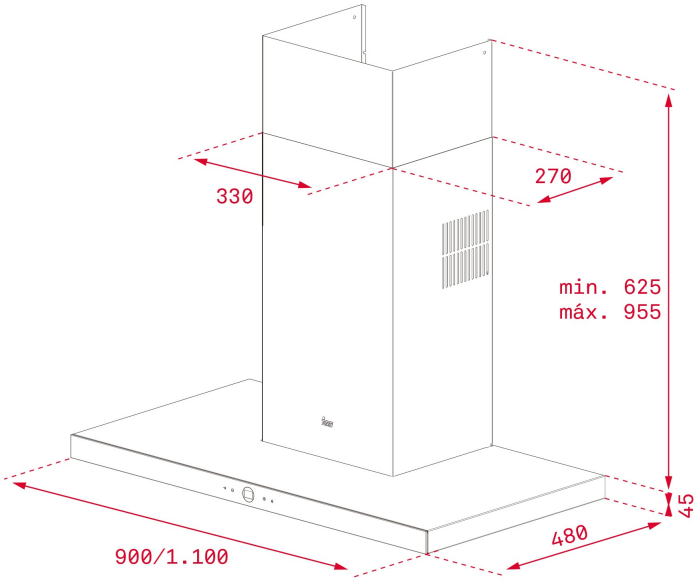

DIMENSIONS

Product height (mm): 670-1000
Product width (mm): 900
Product depth (mm): 480
Product length (mm):
Net weight (Kg): 15,33

TECHNICAL DETAILS

FEATURES

Certificates: CE; CB; Rohs
Ø Outlet (mm): 150
Type of inner light: LED
Inside light Consumption (W): 1 7
Plug type: Schuko plug
Power rate (V): 230
Frequency (Hz): 50
Total hood power (W): 287
Number of motors: 1
Motor power (W): 280
Air flow (Qmin) m3/h: 352
Air flow (Qmax): 651
Air flow (Qboost): 760

ACCESSORIES

Anti Return valve: Yes
Outlet reduction: Yes
Outlet extension: No
Optional Charcoal Filter: C1RTK
Regenerative charcoal filter: R1RTK
Conventional recirculation kit (opt) - w/tube cover: CFH 15200

L3C
Regenerative recirculation kit (opt) - w/tube cover: RFH 15200 L3C

MODELS

Number of filters: 3
Filter description: Stainless Steel filters MMX
Control panel: Touch Control (Glass Front) white display
Stop delay timer: Yes
Filter saturation indicator: Yes
Time clock: Yes
Number of speeds: 3+1

PERFECTA4 DLH 985 T
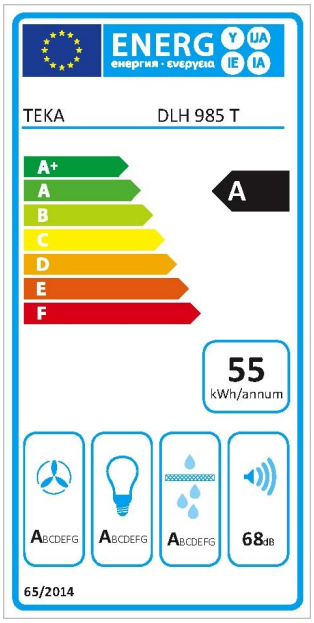
ENERGY LABEL