NC 785 70cm Ultraslim Glass Wing Decorative with ECOPOWER motor

LED

Stop Delay Timer

DESCRIPTION	70cm Ultraslim Glass Wing Decorative with ECOPOWER motor
LIFE STYLE	Total
COLOURS	
REFERENCE	REF. 40455381 EAN. 8421152130520

NC 785

FEATURES

Decorative glass wing hood
Electronic control with display
3 speeds +1 intensive
Free Outlet exhaust capacity (m3/h): 895
Intensive speed exhaust capacity (m3/h): 807
Max speed exhaust capacity (m3/h): 631
Min speed exhaust capacity (m3/h): 315
Intensive speed sound level (dBA): 72
Max speed sound level (dBA): 68
Min speed sound level (dBA): 56
2 LED Lamps
1 Stainless Steel filter
Stop delay timer
Filter saturation indicator
Operating pilot light
Anti-return valve included
Outlet reduction included

NC 785

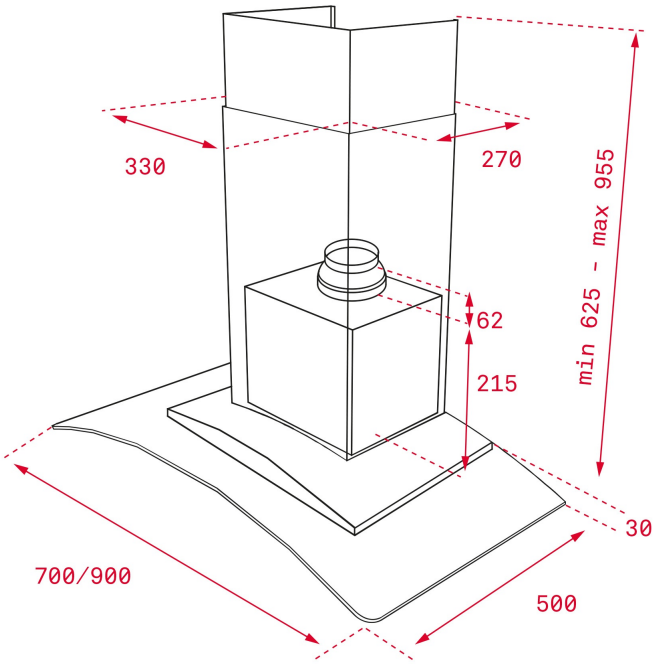

DIMENSIONS

Product height (mm): 674-1004
Product width (mm): 700
Product depth (mm): 500
Product length (mm):
Net weight (Kg): 14,1

TECHNICAL DETAILS

FEATURES

Certificates: CE; CB; Rohs
Ø Outlet (mm): 150
Type of inner light: LED
Inside light Consumption (W): 3
Plug type: European plug
Power rate (V): 220-240
Frequency (Hz): 50
Total hood power (W): 286
Number of motors: 1
Motor power (W): 280
Air flow (Qmin) m3/h: 315
Air flow (Qmax): 631
Air flow (Qboost): 807

ACCESSORIES

Anti Return valve: Yes
Outlet reduction: Yes
Optional Charcoal Filter: C1RTK
Regenerative charcoal filter: R1RTK
Conventional recirculation kit (opt) - w/tube cover: CFH 15200 L3C

Regenerative recirculation kit (opt) - w/tube cover: RFH 15200 L3C

MODELS

Number of filters: 1
Filter description: Stainless Steel filters
Control panel: Backlit electronic control with white display
Stop delay timer: Yes
Filter saturation indicator: Yes
Number of speeds: 3+1

NC 785
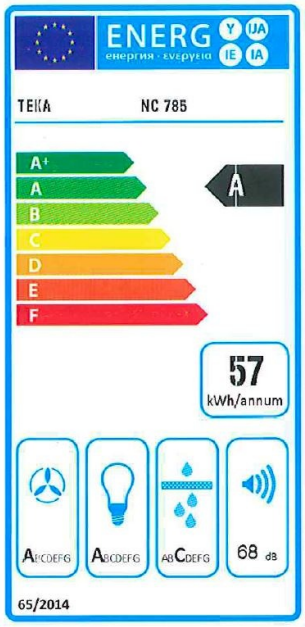
ENERGY LABEL