HLB 8600 A+ Multifunction-Surround Temp. oven with 20 recipes

70L | Plus Extension Telescopic Guide | HydroClean | SoftClose | SurroundTemp

DESCRIPTION	A+ Multifunction-Surround Temp. oven with 20 recipes
LIFE STYLE	Maestro
COLOURS	
REFERENCE	REF. 111000014 EAN. 8434778008302

HLB 8600

FEATURES

Urban Colors Edition
Multifunction SurroundTemp oven
12 cooking functions
Automatic HydroClean system
Touch control display with knob
Personal cooking assistant: 20 automatic programs
Chrome supports with 5 cooking levels
Easy slide telescopic guides
Removable triple glazed door
SoftClose system
Children safety lock
Automatic disconnection safety system
Automatic quick preheating
Anti-tip deep tray and reinforced grid
Capacity (gross/net): 71 / 70 litres

HLB 8600

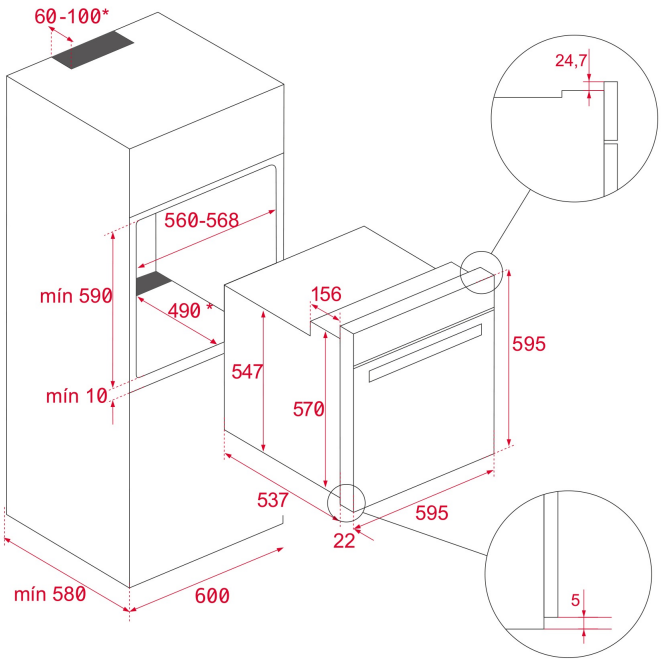

DIMENSIONS

Product height (mm): 595
Product width (mm): 595
Product depth (mm): 537+22
Product length (mm):
Net weight (Kg): 32

TECHNICAL DETAILS

FEATURES

Certificates: N / CE / CCA / CB/GMARK/ JAS-ANZ/SASO
Number of cavities: 1
Type of inner light: Halogen
Inside light position: RIGHT TOP CORNER
Enamelled cavity: Yes
Min. Temperature Regulator (ºC): 30
Max. Temperature Regulator (ºC): 270
Function selector: ELECTRONIC
Number of cooking functions: 12
Number of recipes: 20
Top + Bottom function: Yes
Grill + Bottom function: Yes
Grill function: Yes
MaxiGrill function: Yes
Top + Bottom + Fan function: Yes
Bottom function: Yes
Bottom + TURBO (Pizza) function: Yes
Turbo function: Yes
ECO function: Yes
Ferment function: Yes
Automatic quick heating: Yes
Slow Cook: Yes

Knobs type: MMX FIX ROTATIVE
Removable chromed tray guides: Yes
Number of guide levels: 5
Easy slide telescopic guides: Yes
Drop-down grill: Yes
Forced refrigeration tangential 1 speed: Yes
SoftClose: Yes

ELECTRIC CONNECTION

Maximum Nominal Power (W): 3215
Frequency (Hz): 50/60
Power rate (V): 220-240
Cable Connection Length (cm): 150
Plug: Yes
Inside light Consumption (W): 25

ENERGY CONSUMPTION

Energy consumption per cycle in conventional mode (kWh): 0.83
Energy consumption per cycle in fan-forced convection mode (kWh): 0,68
Bottom Heating Element (W): 1150
Grill (W): 1400
Maxi Grill (W): 2500
Traditional (W): 2550
Turbo (W): 2000
Multifunction Turbo (W): 22
Cooling Fan Motor (W): 18

SAFETY SYSTEMS

Automatic disconnection when opening the door: Yes
Panel blocking system: Yes
Children safety block option: Yes
Grill protection: Yes
Anti-tip tray system: Yes
Safety Thermostat: Yes

CLEANING SYSTEM

Crystal Clean Enamel (Slippery): Yes
Hydroclean PRO: Yes

ACCESSORIES

Deep Tray (50 mm): 1
Steak tray: 0
Reinforced grid: 1

ENERGY EFFICIENCY

Energy Efficiency Class: A+
Energy Efficiency Index (EEI): 81

HLB 8600
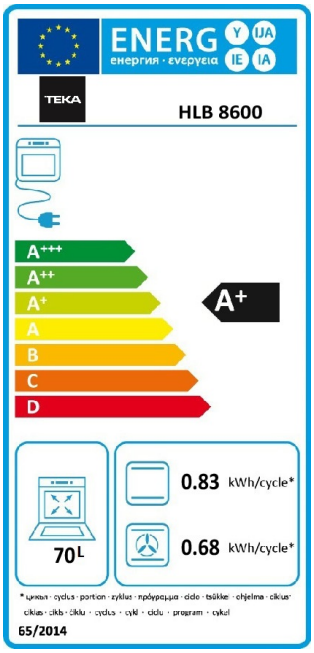
ENERGY LABEL